Internal Use Only

North/Latin America http://aic.lgservice.com
Europe/Africa http://eic.lgservice.com
Asia/Oceania http://biz.lgservice.com

LCD TV
SERVICE MANUAL

CHASSIS : LB03B

MODEL : 32LD560 32LD560-TA

CAUTION
BEFORE SERVICING THE CHASSIS,
READ THE SAFETY PRECAUTIONS IN THIS MANUAL.

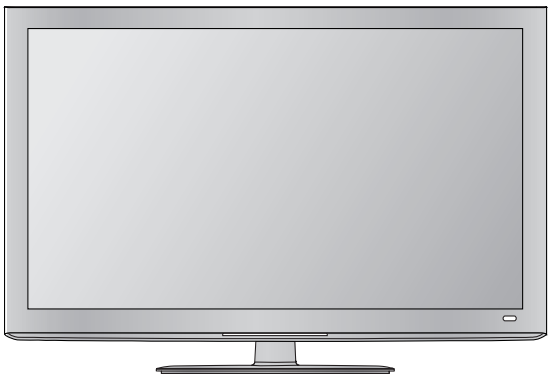

P/NO : MFL63261916 (1003-REV00)

Printed in Korea

CONTENTS

CONTENTS 2

SPECIFICATION 3

ADJUSTMENT INSTRUCTION 5

BLOCK DIAGRAM.....13

EXPLODED VIEW 17

SVC. SHEET .....

Copyright © 2010 LG Electronics. Inc. All rights reserved.
Only for training and service purposes

LGE Internal Use Only

SAFETY PRECAUTIONS

IMPORTANT SAFETY NOTICE

Many electrical and mechanical parts in this chassis have special safety-related characteristics. These parts are identified by ⚠ in the Schematic Diagram and Exploded View.
It is essential that these special safety parts should be replaced with the same components as recommended in this manual to prevent Shock, Fire, or other Hazards.
Do not modify the original design without permission of manufacturer.

General Guidance

An **isolation Transformer should always be used** during the servicing of a receiver whose chassis is not isolated from the AC power line. Use a transformer of adequate power rating as this protects the technician from accidents resulting in personal injury from electrical shocks.

It will also protect the receiver and it's components from being damaged by accidental shorts of the circuitry that may be inadvertently introduced during the service operation.

If any fuse (or Fusible Resistor) in this TV receiver is blown, replace it with the specified.

When replacing a high wattage resistor (Oxide Metal Film Resistor, over 1 W), keep the resistor 10 mm away from PCB.

Keep wires away from high voltage or high temperature parts.

Before returning the receiver to the customer,

always perform an **AC leakage current check** on the exposed metallic parts of the cabinet, such as antennas, terminals, etc., to be sure the set is safe to operate without damage of electrical shock.

Leakage Current Cold Check(Antenna Cold Check)
With the instrument AC plug removed from AC source, connect an electrical jumper across the two AC plug prongs. Place the AC switch in the on position, connect one lead of ohm-meter to the AC plug prongs tied together and touch other ohm-meter lead in turn to each exposed metallic parts such as antenna terminals, phone jacks, etc.
If the exposed metallic part has a return path to the chassis, the measured resistance should be between 1 MΩ and 5.2 MΩ.
When the exposed metal has no return path to the chassis the reading must be infinite.
An other abnormality exists that must be corrected before the receiver is returned to the customer.

Leakage Current Hot Check (See below Figure)
Plug the AC cord directly into the AC outlet.

Do not use a line Isolation Transformer during this check.
Connect 1.5 K / 10 watt resistor in parallel with a 0.15 uF capacitor between a known good earth ground (Water Pipe, Conduit, etc.) and the exposed metallic parts.
Measure the AC voltage across the resistor using AC voltmeter with 1000 ohms/volt or more sensitivity.
Reverse plug the AC cord into the AC outlet and repeat AC voltage measurements for each exposed metallic part. Any voltage measured must not exceed 0.75 volt RMS which is corresponds to 0.5 mA.
In case any measurement is out of the limits specified, there is possibility of shock hazard and the set must be checked and repaired before it is returned to the customer.

Leakage Current Hot Check circuit

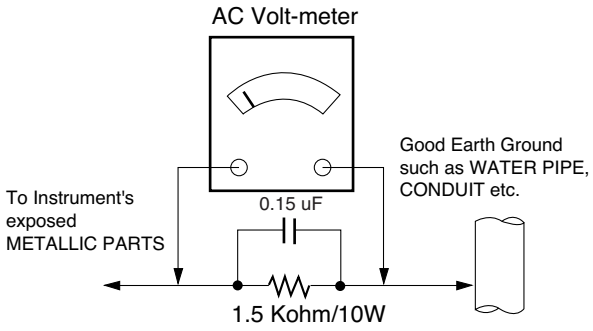

When 25A is impressed between Earth and 2nd Ground for 1 second, Resistance must be less than 0.1 Ω
*Base on Adjustment standard

Copyright © 2010 LG Electronics. Inc. All rights reserved.
Only for training and service purposes

LGE Internal Use Only

SPECIFICATION

NOTE : Specifications and others are subject to change without notice for improvement.

1. Application range

This specification is applied to the LCD TV used LB03B chassis.

2. Requirement for Test

Each part is tested as below without special appointment.

1) Temperature: 25 ºC ± 5 ºC(77 ºF ± 9 ºF), CST: 40 ºC ± 5 ºC
2) Relative Humidity : 65 % ± 10 %
3) Power Voltage: Standard input voltage (AC 100-240 V~ 50 / 60 Hz)
   * Standard Voltage of each products is marked by models.
4) Specification and performance of each parts are followed each drawing and specification by part number in accordance with BOM.
5) The receiver must be operated for about 5 minutes prior to the adjustment.

3. Test method

1) Performance: LGE TV test method followed
2) Demanded other specification
   - Safety : CE, IEC specification
   - EMC :CE, IEC

4. Model General Specification

No.	Item	Specification	Remarks
1	Market	Asia, Oceania, Africa, Middle East (PAL/DVB Market)	DTV & Analog *DTV Region: Australia/New Zealand(AU), Singapore(SG), Indonesia(ID), Malaysia(MY), Vietnam(VN), South Africa(SA). -Considering for Israel(IL)
2	Broadcasting system	1) PAL/SECAM–B/G/D/K 2) PAL-I/II 3) NTSC-M 4) DVB-T	* Australia/India : only PAL
3	Receiving system	Analog : Upper Heterodyne Digital : COFDM (DVB-T)	▶ DBV-T - Guard Interval(Bitrate_Mbit/s) 1/4, 1/8, 1/16, 1/32 - Modulation : Code Rate QPSK : 1/2, 2/3, 3/4, 5/6, 7/8 16-QAM : 1/2, 2/3, 3/4, 5/6, 7/8 64-QAM : 1/2, 2/3, 3/4, 5/6, 7/8
4	Video Input RCA	PAL, SECAM, NTSC	4 System : PAL, SECAM, NTSC, PAL60
5	Component Input	Y/Cb/Cr Y/Pb/Pr	
6	RGB Input	RGB-PC	Analog(D-SUB 15PIN)
7	HDMI Input	HDMI1/2/3 : HDMI/DVI HDMI4 : Only HDMI	PC (HDMI version 1.3) Support HDCP PCM/AC-3
8	Audio Input	RGB/DVI Audio/Component/AV	L/R Input
9	SDPIF out	Optical Output	
10	Earphone out	L/R Out	Available for all input source.
11	USB	JPEG, MP3, Divx HD	

Copyright © 2010 LG Electronics. Inc. All rights reserved.
Only for training and service purposes

LGE Internal Use Only

5. Component Video Input (Y, C_B/P_B, C_R/P_R)

No.	Specification				Remark
	Resolution	H-freq(kHz)	V-freq(Hz)		
1.	720x480	15.73	60.00	SDTV,DVD 480i	
2.	720x480	15.63	59.94	SDTV,DVD 480i	
3.	720x480	31.47	59.94	480p	
4.	720x480	31.50	60.00	480p	
5.	720x576	15.625	50.00	SDTV,DVD 625 Line	
6.	720x576	31.25	50.00	HDTV 576p	
7.	1280x720	45.00	50.00	HDTV 720p	
8.	1280x720	44.96	59.94	HDTV 720p	
9.	1280x720	45.00	60.00	HDTV 720p	
10.	1920x1080	31.25	50.00	HDTV 1080i	
11.	1920x1080	33.75	60.00	HDTV 1080i	
12.	1920x1080	33.72	59.94	HDTV 1080i	
13.	1920x1080	56.250	50	HDTV 1080p	
14.	1920x1080	67.5	60	HDTV 1080p	

6. RGB (PC)

No.	Specification				Proposed	Remarks
	Resolution	H-freq(kHz)	V-freq(Hz)	Pixel Clock(MHz)		
1.	720*400	31.468	70.08	28.321		For only DOS mode
2.	640*480	31.469	59.94	25.17	VESA	Input 848*480 60Hz, 852*480 60 Hz -> 640*480 60 Hz Display
3.	800*600	37.879	60.31	40.00	VESA	
4.	1024*768	48.363	60.00	65.00	VESA(XGA)	
5.	1280*768	47.78	59.87	79.5	WXGA	
6.	1360*768	47.72	59.8	84.75	WXGA	
7.	1280*1024	63.595	60.0	108.875	SXGA	FHD model
8.	1920*1080	66.587	59.93	138.625	WUXGA	FHD model

Copyright © 2010 LG Electronics. Inc. All rights reserved.
Only for training and service purposes

LGE Internal Use Only

7. HDMI Input

(1) DTV Mode

No.	Resolution	H-freq(kHz)	V-freq.(Hz)	Pixel clock(MHz)	Proposed	Remark
1.	720*480	31.469 /31.5	59.94 /60	27.00/27.03	SDTV 480P	
2.	720*576	31.25	50	54	SDTV 576P	
3.	1280*720	37.500	50	74.25	HDTV 720P	
4.	1280*720	44.96 /45	59.94 /60	74.17/74.25	HDTV 720P	
5.	1920*1080	33.72 /33.75	59.94 /60	74.17/74.25	HDTV 1080I	
6.	1920*1080	28.125	50.00	74.25	HDTV 1080I	
7.	1920*1080	26.97 /27	23.97 /24	74.17/74.25	HDTV 1080P	
8.	1920*1080	33.716 /33.75	29.976 /30.00	74.25	HDTV 1080P	
9.	1920*1080	56.250	50	148.5	HDTV 1080P	
10.	1920*1080	67.43 /67.5	59.94 /60	148.35/148.50	HDTV 1080P	

(2) PC Mode

No.	Resolution	H-freq(kHz)	V-freq.(Hz)	Pixel clock(MHz)	Proposed	Remark
1.	720*400	31.468	70.08	28.321		HDCP
2.	640*480	31.469	59.94	25.17	VESA	HDCP
3.	800*600	37.879	60.31	40.00	VESA	HDCP
4.	1024*768	48.363	60.00	65.00	VESA(XGA)	HDCP
5.	1280*768	47.78	59.87	79.5	WXGA	HDCP
6.	1360*768	47.72	59.8	84.75	WXGA	HDCP
7.	1280*1024	63.595	60.0	108.875	SXGA	HDCP/FHD model
8.	1920*1080	67.5	60.00	138.625	WUXGA	HDCP/FHD model

Copyright © 2010 LG Electronics. Inc. All rights reserved.
Only for training and service purposes

LGE Internal Use Only

ADJUSTMENT INSTRUCTION

1. Application Range

This specification sheet is applied to all of the LCD TV with LB03B chassis.

2. Designation

(1) Because this is not a hot chassis, it is not necessary to use an isolation transformer. However, the use of isolation transformer will help protect test instrument.
(2) Adjustment must be done in the correct order.
(3) The adjustment must be performed in the circumstance of 25 ºC ± 5 ºC of temperature and 65 % ± 10 % of relative humidity if there is no specific designation.
(4) The input voltage of the receiver must keep AC 100-240 V~ 50 / 60Hz.
(5) The receiver must be operated for about 5 minutes prior to the adjustment when module is in the circumstance of over 15.

In case of keeping module is in the circumstance of 0 °C, it should be placed in the circumstance of above 15 °C for 2 hours

In case of keeping module is in the circumstance of below -20 °C, it should be placed in the circumstance of above 15 °C for 3 hours.

[Caution]
When still image is displayed for a period of 20 minutes or longer (especially where W/B scale is strong. Digital pattern 13ch and/or Cross hatch pattern 09ch), there can some afterimage in the black level area.

3. Automatic Adjustment

3.1. ADC Adjustment

(1) Overview
ADC adjustment is needed to find the optimum black level and gain in Analog-to-Digital device and to compensate RGB deviation.

(2) Equipment & Condition
1) Jig (RS-232C protocol)
2) MSPG-925 Series Pattern Generator(MSPG-925FA, pattern - 65)
- Resolution : 480i Comp1
1080P Comp1
1920*1080 RGB
- Pattern : Horizontal 100% Color Bar Pattern
- Pattern level : 0.7±0.1 Vp-p
- Image

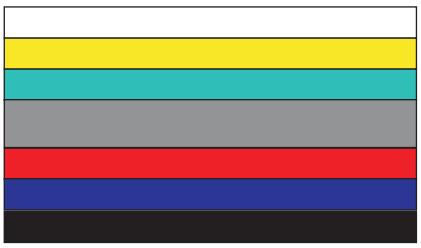

(3) Adjustment
1) Adjustment method
- Using RS-232, adjust items listed in 3.1 in the other shown in “3.1.(3).3)”

2) Adj. protocol

Protocol	Command	Set ACK
Enter adj. mode	aa 00 00	a 00 OK00x
Source change	xb 00 40 xb 00 60	b 00 OK40x (Adjust 480i Comp1) b 00 OK60x (Adjust 1024*768 RGB)
Begin adj.	ad 00 10	
Return adj. result		OKx (Case of Success) NGx (Case of Fail)
Read adj. data	(main) ad 00 20	(main) 00000000000000000000000007c007b006dx
	(sub) ad 00 21	(Sub) 00000007000000000000000007c00830077x
Confirm adj.	ad 00 99	NG 03 00x (Fail) NG 03 01x (Fail) NG 03 02x (Fail) OK 03 03x (Success)
End adj.	aa 00 90	a 00 OK90x

Ref.) ADC Adj. RS232C Protocol_Ver1.0

3) Adj. order
- aa 00 00 [Enter ADC adj. mode]
- xb 00 40 [Change input source to Component1(480i)]
- ad 00 10 [Adjust 480i Comp1]
- xb 00 60 [Change input source to RGB(1024*768)]
- ad 00 10 [Adjust 1024*768 RGB]
- ad 00 90 End adj.

3.2. MAC Address

(1) Equipment & Condition
- Play file: Serial.exe
- MAC Address edit
- Input Start / End MAC address

(2) Download method
1) Communication Prot connection

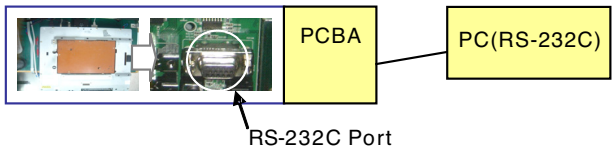

Connect: PCBA Jig-> RS-232C Port== PC-> RS-232C Port

Copyright © 2010 LG Electronics. Inc. All rights reserved.
Only for training and service purposes

LGE Internal Use Only

2) MAC Address Download
- Com 1,2,3,4 and 115200(Baud rate)
- Port connection button click(1)

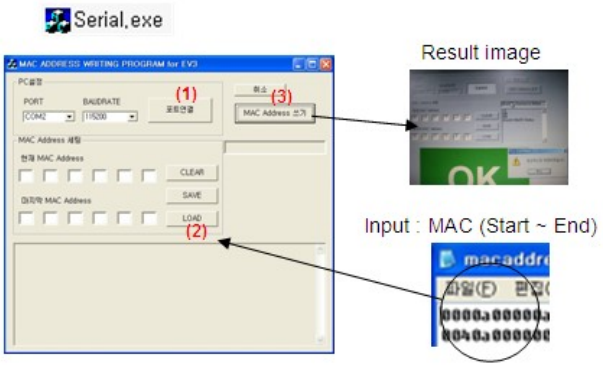

- Load button click(2) for MAC Address write.
- Start MAC Address write button(3)
- Check the OK Or NG

3.3. LAN

(1) Equipment & Condition
■ Each other connection to LAN Port of IP Hub and Jig

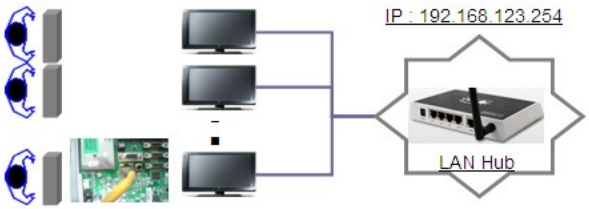

(2) LAN inspection solution
■ LAN Port connection with PCB
■ Network setting at MENU Mode of TV
■ setting automatic IP
■ Setting state confirmation
-> If automatic setting is finished, you confirm IP and MAC Address.

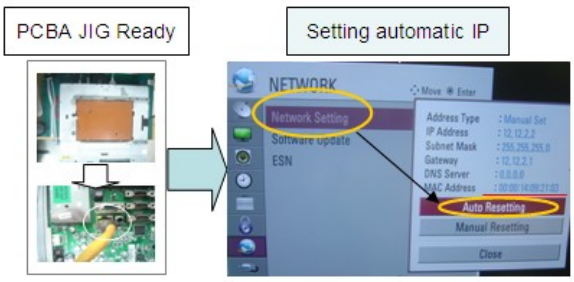

3.4. LAN PORT INSPECTION(PING TEST)

Connect SET -> LAN port == PC -> LAN Port

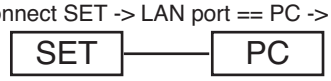

(1) Equipment setting
1) Play the LAN Port Test PROGRAM.
2) Input IP set up for an inspection to Test Program.
*IP Number : 12.12.2.2

(2) LAN PORT inspection (PING TEST)
1) Play the LAN Port Test Program.
2) Connect each other LAN Port Jack.
3) Play Test (F9) button and confirm OK Message.
4) Remove LAN CABLE

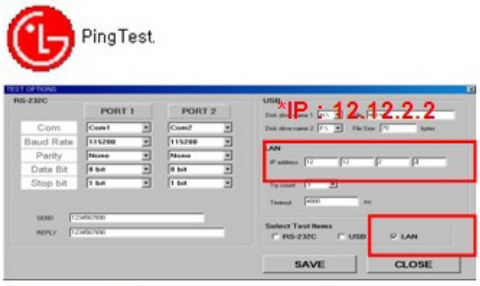

Copyright © 2010 LG Electronics. Inc. All rights reserved.
Only for training and service purposes

LGE Internal Use Only

4. Manual Adjustment

4.1. ADC(GP2) Adjustment

4.1.1. Overview

ADC adjustment is needed to find the optimum black level and gain in Analog-to-Digital device and to compensate RGB deviation.

4.1.2. Equipment & Condition

1) Adjust Remocon
2) 801GF(802B, 802F, 802R) or MSPG925FA Pattern Generator
   - Resolution :
     480i, 720*480 (MSPG-925FA -> Model: 209, Pattern: 65) - 480i
     1080p, 1920*1080 (MSPG-925FA -> Model: 225, Pattern: 65) - 1080p
   - Pattern : Horizontal 100% Color Bar Pattern
   - Pattern level: 0.7 ± 0.1 Vp-p
   - Image

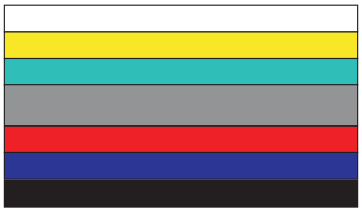

3) Must use standard cable

4.1.3. Adjust method

(1) ADC 480i, 1080p Comp1
   1) Check connected condition of Comp1 cable to the equipment
   2) Give a 480i, 1080p Mode, Horizontal 100% Color Bar Pattern to Comp1.
      (MSPG-925FA -> Model: 209, Pattern: 65) - 480i
      (MSPG-925FA -> Model: 225, Pattern: 65) - 1080p
   3) Change input mode as Component1 and picture mode as “Standard”
   4) Press the In-start Key on the ADJ remote after at least 1 min of signal reception. Then, select 7. External ADC -> 1. COMP 1080p on the menu. Press enter key. The adjustment will start automatically.
   5) If ADC calibration is successful, “ADC RGB Success” is displayed. If ADC calibration is failure, “ADC RGB Fail” is displayed.
   6) If ADC calibration is failure, after recheck ADC pattern or condition retry calibration Error message refer to 5).

(2) ADC 1920*1080 RGB
   1) Check connected condition of Component & RGB cable to the equipment
   2) Give a 1920*1080 Mode, 100 % Horizontal Color Bar Pattern to RGB port.
      (MSPG-925 Series -> model: 126 , pattern: 65)
   3) Change input mode as RGB and picture mode as “Standard”.
   4) Press the In-start Key on the ADJ remote after at least 1 min of signal reception. Then, select 7. External ADC -> 1. COMP 1080p on the menu. Press enter key. The adjustment will start automatically.
   5) If ADC calibration is successful, “ADC RGB Success” is displayed. If ADC calibration is failure, “ADC RGB Fail” is displayed.
   6) If ADC calibration is failure, after recheck ADC pattern or condition retry calibration Error message refer to 5).

4.2. EDID(The Extended Display Identification Data)/DDC(Display Data Channel) download

(1) Overview
It is a VESA regulation. A PC or a MNT will display an optimal resolution through information sharing without any necessity of user input. It is a realization of “Plug and Play”.

(2) Equipment
- Adjust remote control
- Since embedded EDID data is used, EDID download JIG, HDMI cable and D-sub cable are not need.

(3) Download method
1) Press Adj. key on the Adj. R/C, then select “10.EDID D/L”, By pressing Enter key, enter EDID D/L menu.
2) Select [Start] button by pressing Enter key, HDMI1 / HDMI2 / HDMI3 / HDMI4 / RGB are Writing and display OK or NG.

For Analog EDID	For HDMI EDID	
D-sub to D-sub	DVI-D to HDMI or HDMI to HDMI	

(4) EDID DATA

■ HDMI

	0	1	2	3	4	5	6	7	8	9	A	B	C	D	E	F
0	00	FF	FF	FF	FF	FF	FF	00	1E	6D	01	00	01	01	01	01
10	01	14	01	03	68	10	09	78	0A	EE	91	A3	54	4C	99	26
20	0F	50	54	A1	08	00	81	80	61	40	45	40	31	40	01	01
30	01	01	01	01	01	01	02	3A	80	18	71	38	2D	40	58	2C
40	45	00	A0	5A	00	00	00	1E	01	1D	00	72	51	D0	1E	20
50	6E	28	55	00	A0	5A	00	00	00	1E	00	00	00	FD	00	3A
60	3F	1E	53	10	00	0A	20	20	20	20	20	20	00	00	00	FC
70	00	4C	47	20	54	56	0A	20	20	20	20	20	20	20	00	1D

■ RGB

	0	1	2	3	4	5	6	7	8	9	A	B	C	D	E	F
0	00	FF	FF	FF	FF	FF	FF	00	1E	6D	01	00	01	01	01	01
10	01	14	01	03	80	10	09	78	0A	EE	91	A3	54	4C	99	26
20	0F	50	54	A1	08	00	71	4F	81	01	01	01	01	01	01	01
30	01	01	01	01	01	01	02	3A	80	18	71	38	2D	40	58	2C
40	45	00	A0	5A	00	00	00	1E	01	1D	00	72	51	D0	1E	20
50	6E	28	55	00	A0	5A	00	00	00	1E	00	00	00	FD	00	3A
60	3F	1E	53	10	00	0A	20	20	20	20	20	20	00	00	00	FC
70	00	4C	47	20	54	56	0A	20	20	20	20	20	20	20	01	D7
80	02	03	26	F1	4E	10	1F	84	13	05	14	03	02	12	20	21
90	22	15	01	26	15	07	50	09	57	07	67	03	0C	00	XX	XX
A0	B8	2D	E3	05	03	01	01	1D	80	18	71	1C	16	20	58	2C
B0	25	00	A0	5A	00	00	00	9E	01	1D	00	80	51	D0	1A	20
C0	6E	88	55	00	A0	5A	00	00	00	1A	02	3A	80	18	71	38
D0	2D	40	58	2C	45	00	A0	5A	00	00	00	1E	66	21	50	B0
E0	51	00	1B	30	40	70	36	00	A0	5A	00	00	00	1E	00	00
F0	00	00	00	00	00	00	00	00	00	00	00	00	00	00	00	XX

■ Reference
- HDMI1 ~ HDMI4 / RGB
- In the data of EDID, bellows may be different by S/W or Input mode.

Copyright © 2010 LG Electronics. Inc. All rights reserved.
Only for training and service purposes

LGE Internal Use Only

* Physical Add & Checksum(HDMI)

INPUT	9Eh	9Fh	FFh(Checksum)
HDMI1	10	00	D9
HDMI2	20	00	C9
HDMI3	30	00	B9
HDMI4	40	00	A9

4.3. White Balance Adjustment

4.3.1 Overview

(1) W/B adj. Objective & How-it-works
(2) Objective: To reduce each Panel's W/B deviation
(3) How-it-works : When R/G/B gain in the OSD is at 192, it means the panel is at its Full Dynamic Range. In order to prevent saturation of Full Dynamic range and data, one of R/G/B is fixed at 192, and the other two is lowered to find the desired value.
(4) Adj. condition : normal temperature
 1) Surrounding Temperature : 25 ºC ± 5 ºC
 2) Warm-up time: About 5 Min
 3) Surrounding Humidity : 20 % ~ 80 %

4.3.2 Equipment

1) Color Analyzer: CA-210 (LED Module : CH 14)
2) Adj. Computer(During auto adj., RS-232C protocol is needed)
3) Adjust Remocon
4) Video Signal Generator MSPG-925F 720p/216-Gray (Model:217, Pattern:78)
 -> Only when internal pattern is not available

■ Color Analyzer Matrix should be calibrated using CS-1000

4.3.3. Equipment connection MAP

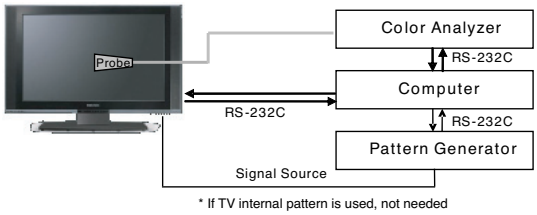

4.3.4. Adj. Command (Protocol)

<Command Format>

START | 6E | A | 50 | A | LEN | A | 03 | A | CMD | A | 00 | A | VAL | A | CS | A | STOP

- LEN: Number of Data Byte to be sent
- CMD: Command
- VAL: FOS Data value
- CS: Checksum of sent data
- A: Acknowledge

Ex) [Send: JA_00_DD] / [Ack: A_00_okDDX]

■ RS-232C Command used during auto-adj.

RS-232C COMMAND [CMD	ID	DATA]	Explanation
wb	00	00	Begin White Balance adj.
wb	00	10	Gain adj.(internal white pattern)
wb	00	1f	Gain adj. completed
wb	00	20	Offset adj.(internal white pattern)
wb	00	2f	Offset adj. completed
wb	00	ff	End White Balance adj.(Internal pattern disappears)

Ex) wb 00 00 -> Begin white balance auto-adj.
 wb 00 10 -> Gain adj.
 ja 00 ff -> Adj. data
 jb 00 c0
 ...
 ...
 wb 00 1f -> Gain adj. completed
 *(wb 00 20(start), wb 00 2f(end)) -> Off-set adj.
 wb 00 ff -> End white balance auto-adj.

■ Adj. Map

	ITEM	Command		Data Range (Hex.)		Default (Decimal)
		Cmd 1	Cmd 2	Min	Max	
Cool	R-Gain	j	g	00	C0	
	G-Gain	j	h	00	C0	
	B-Gain	j	i	00	C0	
	R-Cut					
	G-Cut					
	B-Cut					
Medium	R-Gain	j	a	00	C0	
	G-Gain	j	b	00	C0	
	B-Gain	j	c	00	C0	
	R-Cut					
	G-Cut					
	B-Cut					
Warm	R-Gain	j	d	00	C0	
	G-Gain	j	e	00	C0	
	B-Gain	j	f	00	C0	
	R-Cut					
	G-Cut					

Copyright © 2010 LG Electronics. Inc. All rights reserved.
Only for training and service purposes

LGE Internal Use Only

4.3.5. Adj. method

(1) Auto adj. method

1) Set TV in adj. mode using POWER ON key.
2) Zero calibrate probe then place it on the center of the Display.
3) Connect Cable (RS-232C)
4) Select mode in adj. Program and begin adjustment.
5) When adj. is complete (OK Sing), check adj. status pre mode. (Warm, Medium, Cool)
6) Remove probe and RS-232C cable to complete adj.

■ W/B Adj. must begin as start command “wb 00 00” , and finish as end command “wb 00 ff”, and Adj. offset if need.

(2) Manual adj. method

1) Set TV in Adj. mode using POWER ON
2) Zero Calibrate the probe of Color Analyzer, then place it on the center of LCD module within 10cm of the surface.
3) Press ADJ key -> EZ adjust using adj. R/C -> 7. White-Balance then press the cursor to the right (KEY ►).
(When KEY(►) is pressed 216 Gray internal pattern will be displayed)
4) One of R Gain / G Gain / B Gain should be fixed at 192, and the rest will be lowered to meet the desired value.
5) Adj. is performed in COOL, MEDIUM, WARM 3 modes of color temperature.

■ If internal pattern is not available, use RF input. In EZ Adj. menu 7.White Balance, you can select one of 2 Test-pattern: ON, OFF. Default is inner(ON). By selecting OFF, you can adjust using RF signal in 216 Gray pattern.

■ Adj. condition and cautionary items

1) Lighting condition in surrounding area
Surrounding lighting should be lower 10 lux. Try to isolate adj. area into dark surrounding.
2) Probe location
: Color Analyzer (CA-210) probe should be within 10cm and perpendicular of the module surface (80°~ 100°)
3) Aging time
- After Aging Start, Keep the Power ON status during 5 Minutes.
- In case of LCD, Back-light on should be checked using no signal or Full-white pattern.

4.3.6. Reference (White Balance Adj. coordinate and temperature)

■ Luminance : 216 Gray

■ Standard color coordinate and temperature using CS-1000 (over 66cm(26 inch))

Mode	Color Coordination		Temp	ΔUV
	x	y		
COOL	0.269	0.273	13000 K	0.0000
MEDIUM	0.285	0.293	9300 K	0.0000
WARM	0.313	0.329	6500 K	0.0000

■ Standard color coordinate and temperature using CA-210(CH 9)

Mode	Color Coordination		Temp	ΔUV
	x	y		
COOL	0.269 ± 0.002	0.273 ± 0.002	13000 K	0.0000
MEDIUM	0.285 ± 0.002	0.293 ± 0.002	9300 K	0.0000
WARM	0.313 ± 0.002	0.329 ± 0.002	6500 K	0.0000

4.4. EYE-Q function check

Step 1) Turn on TV
Step 2) Press EYE key of Adj. R/C
Step 3) Cover the Eye Q II sensor on the front of the using your hand and wait for 6 seconds
Step 4) Confirm that R/G/B value is lower than 10 of the “Raw Data (Sensor data, Back light)”. If after 6 seconds, R/G/B value is not lower than 10, replace Eye Q II sensor.
Step 5) Remove your hand from the Eye Q II sensor and wait for 6 seconds.
Step 6) Confirm that “ok” pop up. If change is not seen, replace Eye Q II sensor.

4.5 Checking the function of Bluetooth using adjusts Remote control

- Auto checking
  • Auto checking is doing in “Power Only”.
  • Checking the result of searched (check that is in list or not)
  • Go out of checking mode pushing button “Exit”.

- Manual checking
  • Push the button “Power Only”and “Exit”.
  • Push the button hot key “Bluetooth “.
  • Checking the result of searched (check that is in list or not)
  • Go out of checking mode pushing button “Exit.

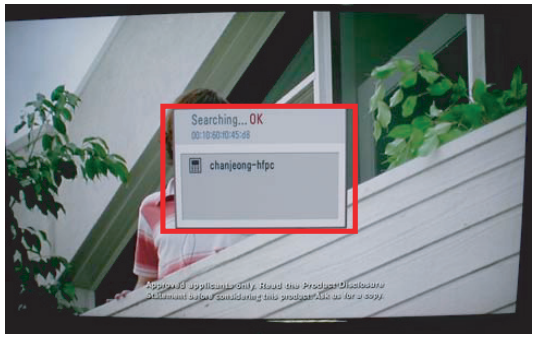

Copyright © 2010 LG Electronics. Inc. All rights reserved.
Only for training and service purposes

LGE Internal Use Only

4.6. Option selection per country

(1) Overview
- Option selection is only done for models in Non-EU
- Applied model: LD03D/03E Chassis applied EU model

(2) Method
1) Press ADJ key on the Adj. R/C, then select Country Group Menu
2) Depending on destination, select Country Group Code 04 or Country Group EU then on the lower Country option, select US, CA, MX. Selection is done using +, - or ►◄ KEY.

4.7. Tool Option selection

- Method : Press Adj. key on the Adj. R/C, then select Tool option.

MODEL	Tool 1	Tool 2	Tool 3	Tool 4	Tool 5
SHARP	17165	23575	56332	24876	1842
LGD	17153	23575	56332	24876	1842

4.8. Ship-out mode check(In-stop)

After final inspection, press IN-STOP key of the Adj. R/C and check that the unit goes to Stand-by mode.
After final inspection, Always turn on the Mechanical S/W.

5. GND and Internal Pressure check

5.1. Method

1) GND & Internal Pressure auto-check preparation
- Check that Power Cord is fully inserted to the SET. (If loose, re-insert)

2) Perform GND & Internal Pressure auto-check
- Unit fully inserted Power cord, Antenna cable and A/V arrive to the auto-check process.
- Connect D-terminal to AV JACK TESTER
- Auto CONTROLLER(GWS103-4) ON
- Perform GND TEST
- If NG, Buzzer will sound to inform the operator.
- If OK, changeover to I/P check automatically. (Remove CORD, A/V form AV JACK BOX)
- Perform I/P test
- If NG, Buzzer will sound to inform the operator.
- If OK, Good lamp will lit up and the stopper will allow the pallet to move on to next process.

5.2. Checkpoint

- TEST voltage
  - GND: 1.5 KV / min at 100 mA
  - SIGNAL: 3 KV / min at 100 mA
- TEST time: 1 second
- TEST POINT
  - GND TEST = POWER CORD GND & SIGNAL CABLE METAL GND
  - Internal Pressure TEST = POWER CORD GND & LIVE & NEUTRAL
- LEAKAGE CURRENT: At 0.5 mArms

6. Audio

No.	Item	Min.	Typ.	Max.	Unit	
1.	Audio practical max Output, L/R	9.0	10.0	12.0	W	EQ Off AVL Off
	(Distortion=10 % max Output)	8.5	8.9	9.8	Vrms	Clear Voice Off
2.	Speaker (8 Ω Impedance)		10.0	15.0	W	EQ On AVL On Clear Voice On

Measurement condition:
1. RF input: Mono, 1 KHz sine wave signal, 100 % Modulation
2. CVBS, Component: 1 KHz sine wave signal 0.4 Vrms
3. RGB PC: 1 KHz sine wave signal 0.7 Vrms

7. USB S/W download

(option, service only)
1) Put the USB Stick to the USB socket
2) Automatically detecting update file in USB Stick
- If your downloaded program version in USB Stick is Low, it didn't work. But your downloaded version is High, USB data is automatically detecting

3) Show the message "Copying files from memory"

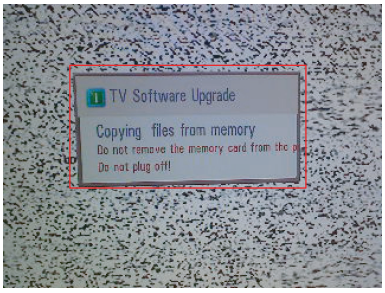

4) Updating is starting.

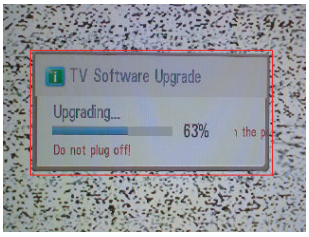

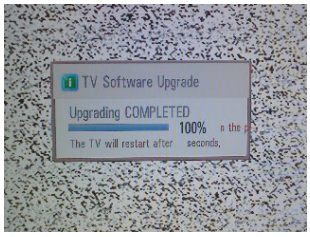

5) Updating Completed, The TV will restart automatically
6) If your TV is turned on, check your updated version and Tool option. (explain the Tool option, next stage)
* If downloading version is more high than your TV have, TV can lost all channel data. In this case, you have to channel recover. if all channel data is cleared, you didn't have a DTV/ATV test on production line.

* After downloading, have to adjust TOOL OPTION again.
1. Push "IN-START" key in service remote control.
2. Select "Tool Option 1" and Push "OK" button.
3. Punch in the number. (Each model has their number.)

Copyright © 2010 LG Electronics. Inc. All rights reserved.
Only for training and service purposes

LGE Internal Use Only

BLOCK DIAGRAM

1. INPUT/INTERFACE

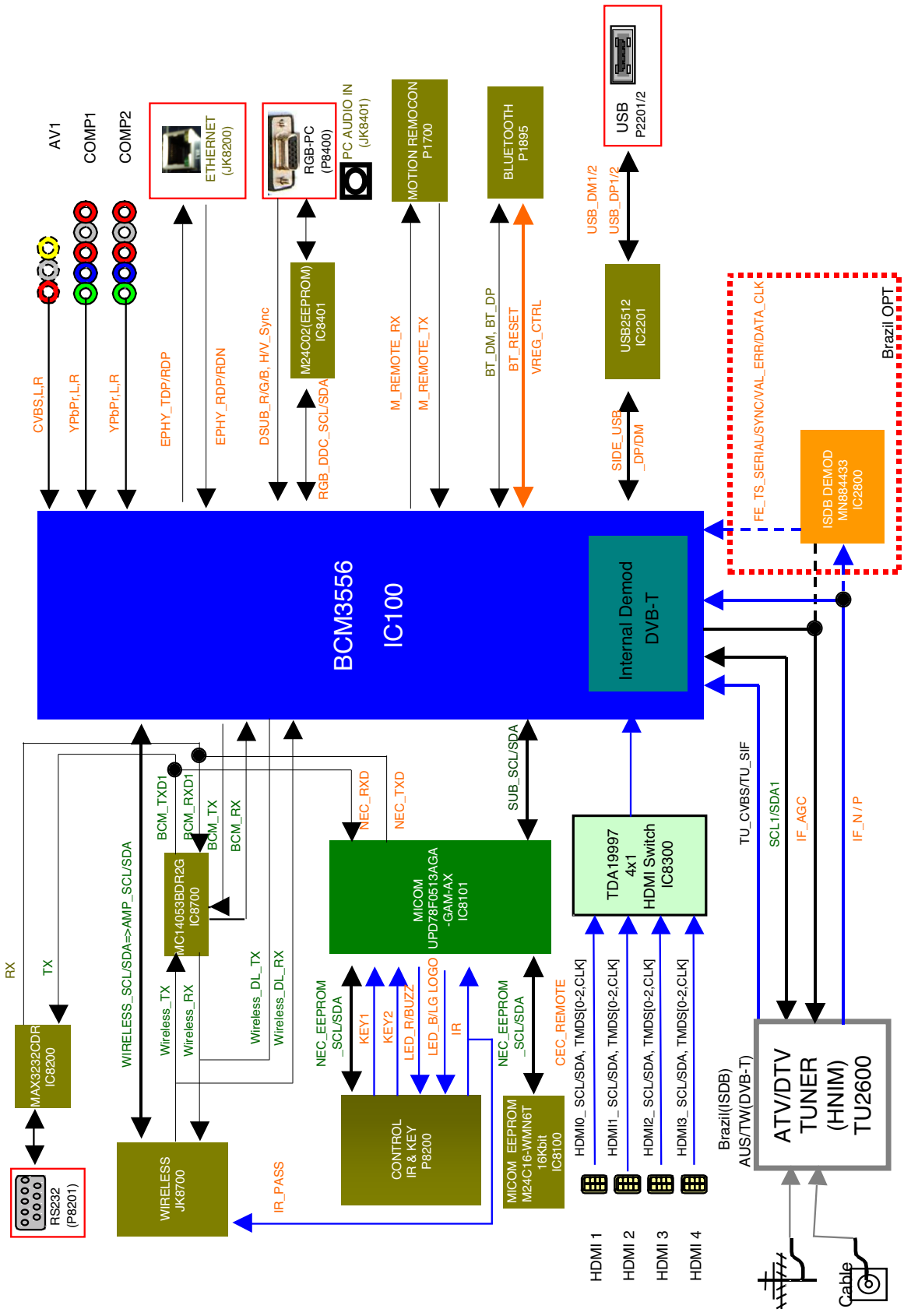

Copyright © 2010 LG Electronics. Inc. All rights reserved.
Only for training and service purposes

LGE Internal Use Only

2. OUT/AUDIO

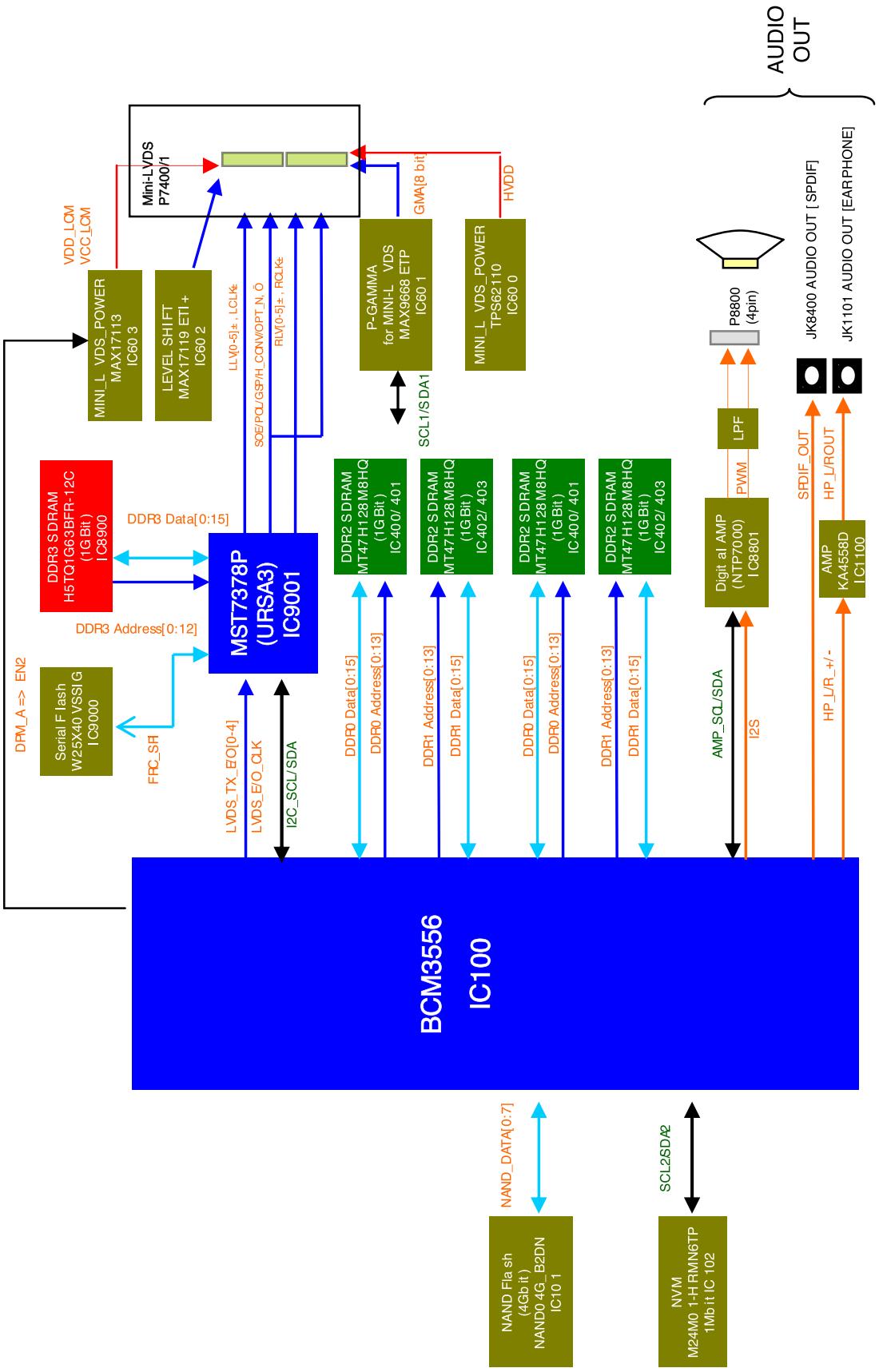

Copyright © 2010 LG Electronics. Inc. All rights reserved.
Only for training and service purposes

LGE Internal Use Only

3. MEMORY

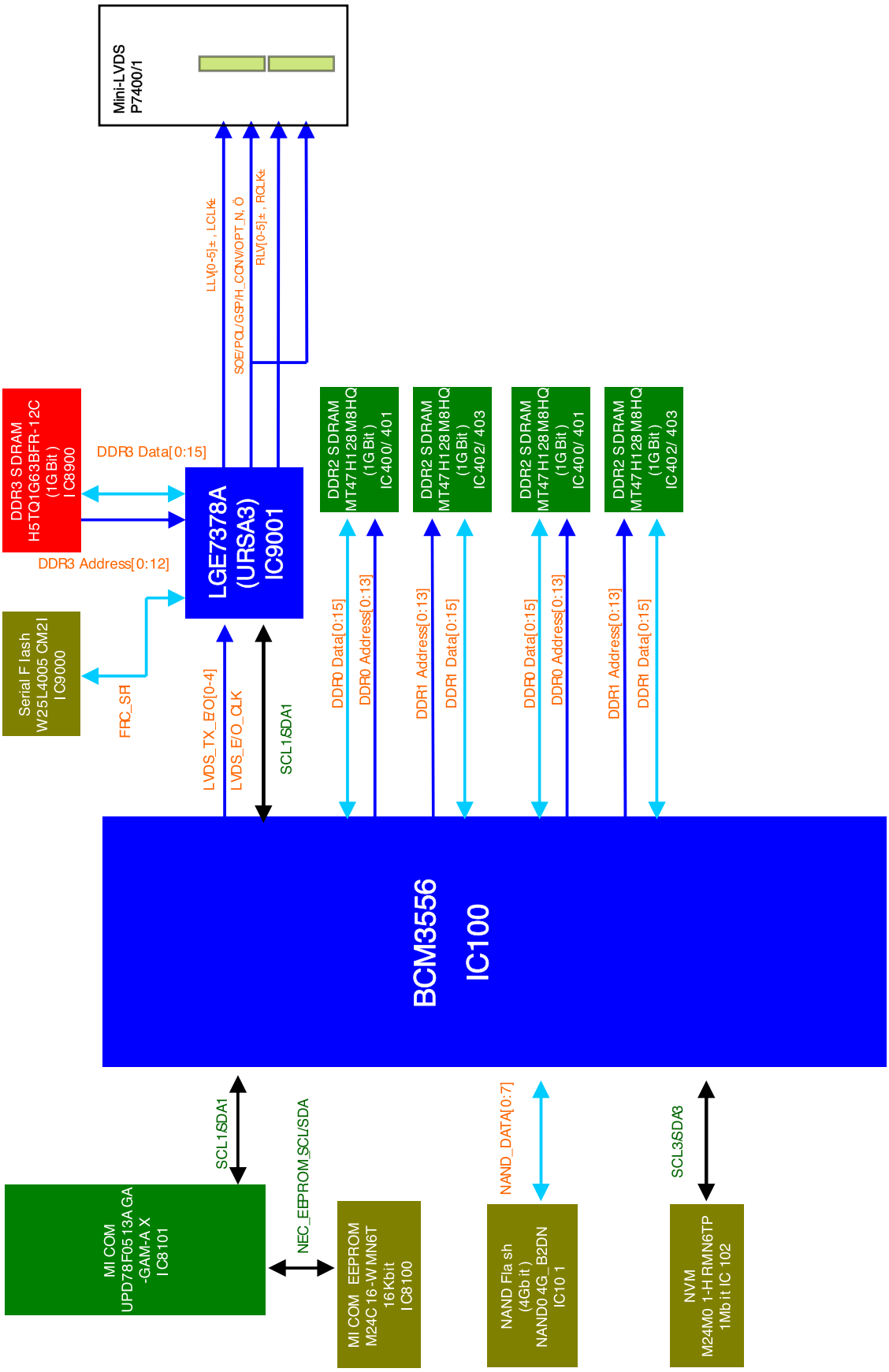

Copyright © 2010 LG Electronics. Inc. All rights reserved.
Only for training and service purposes

LGE Internal Use Only

4. I2C Map_DV2.

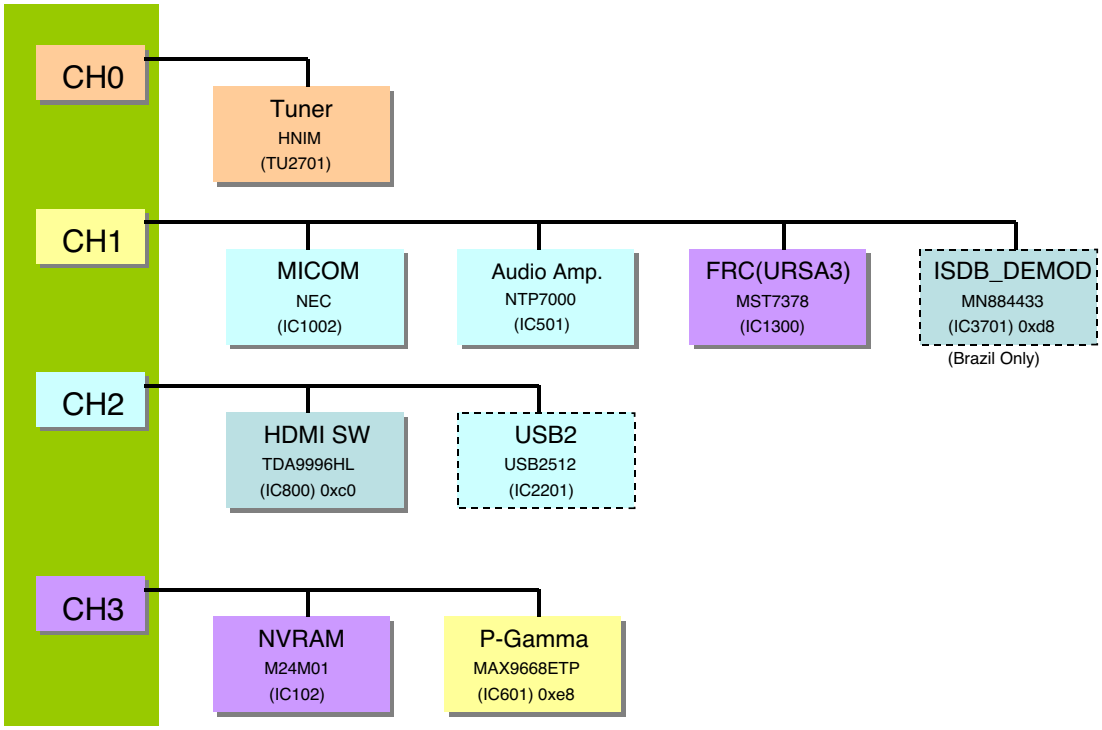

5. I2C Map_DV1

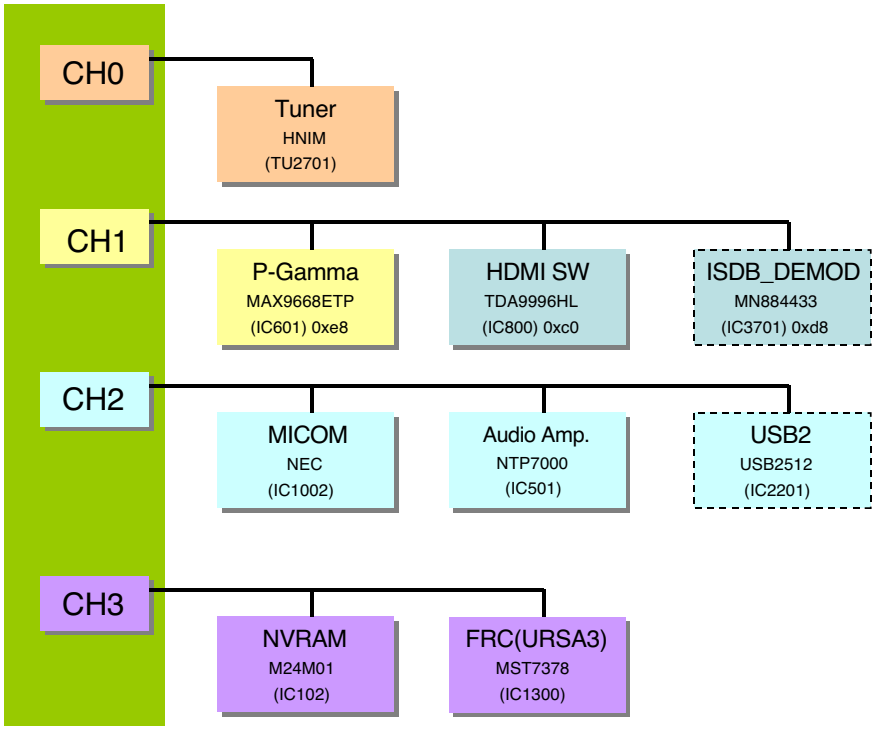

Copyright © 2010 LG Electronics. Inc. All rights reserved.
Only for training and service purposes

LGE Internal Use Only

EXPLODED VIEW

IMPORTANT SAFETY NOTICE

Many electrical and mechanical parts in this chassis have special safety-related characteristics. These parts are identified by ⚠ in the Schematic Diagram and EXPLODED VIEW.
It is essential that these special safety parts should be replaced with the same components as recommended in this manual to prevent X-RADIATION, Shock, Fire, or other Hazards.
Do not modify the original design without permission of manufacturer.

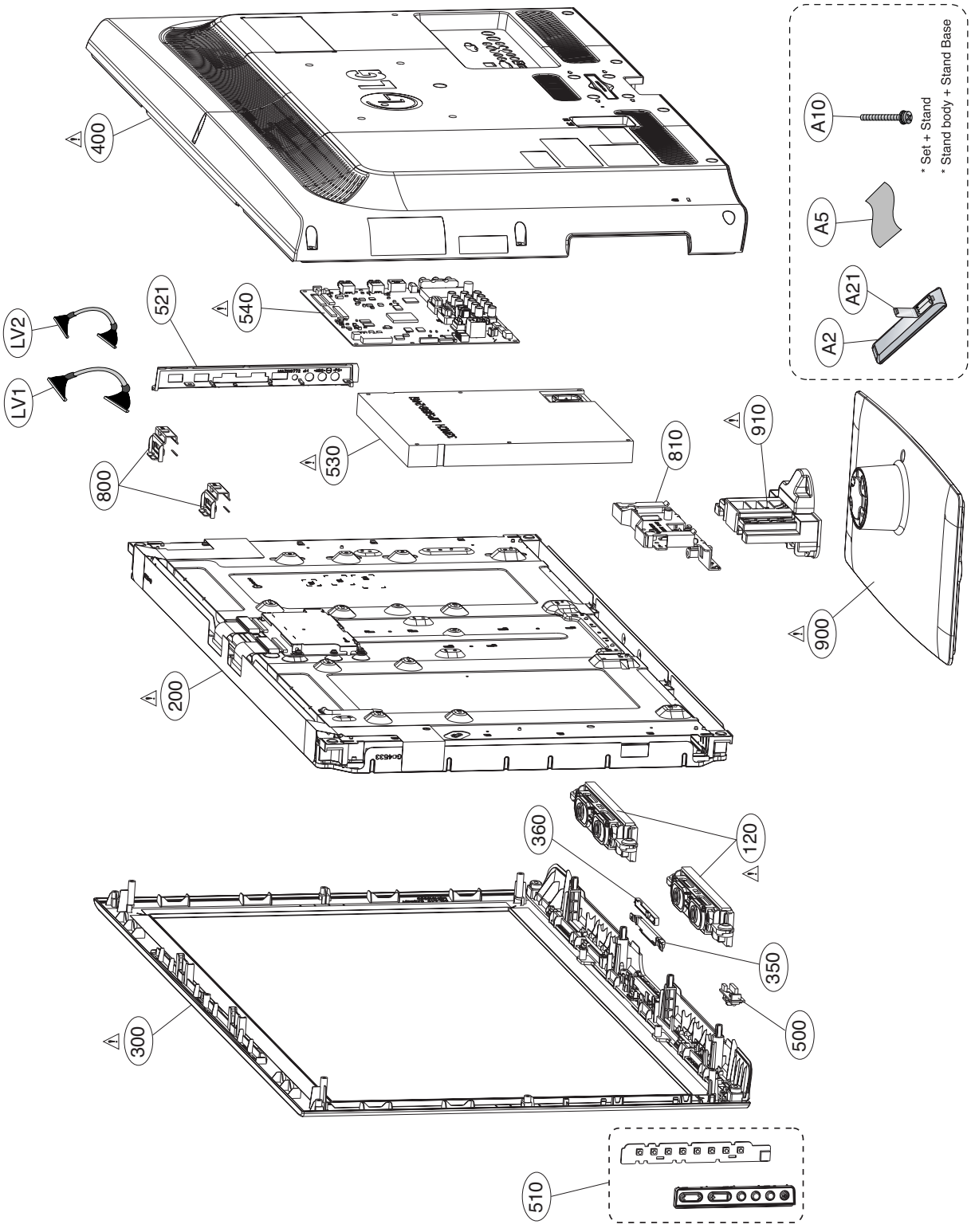

Copyright © 2010 LG Electronics. Inc. All rights reserved.
Only for training and service purposes

LGE Internal Use Only

RESET

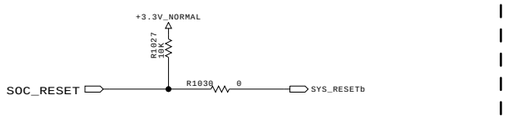

NVRAM

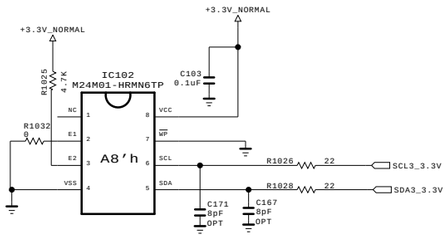

SMD GASKET

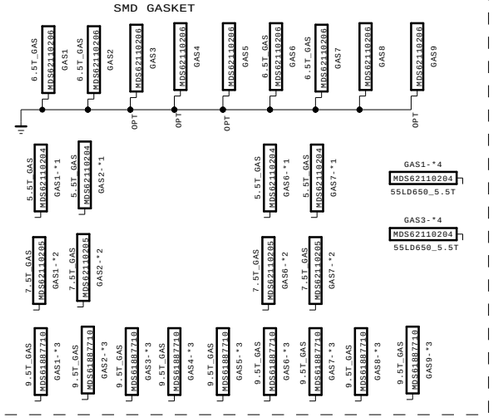

From wireless_I2C to micom I2C

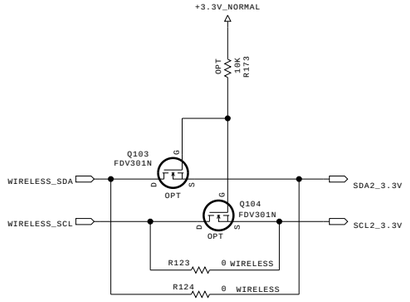

* I2C MAP

* I2C_0 :

* I2C_1 :

* I2C_2 :

* I2C_3 :

IC100
LGE3556C (C0 VERSION)

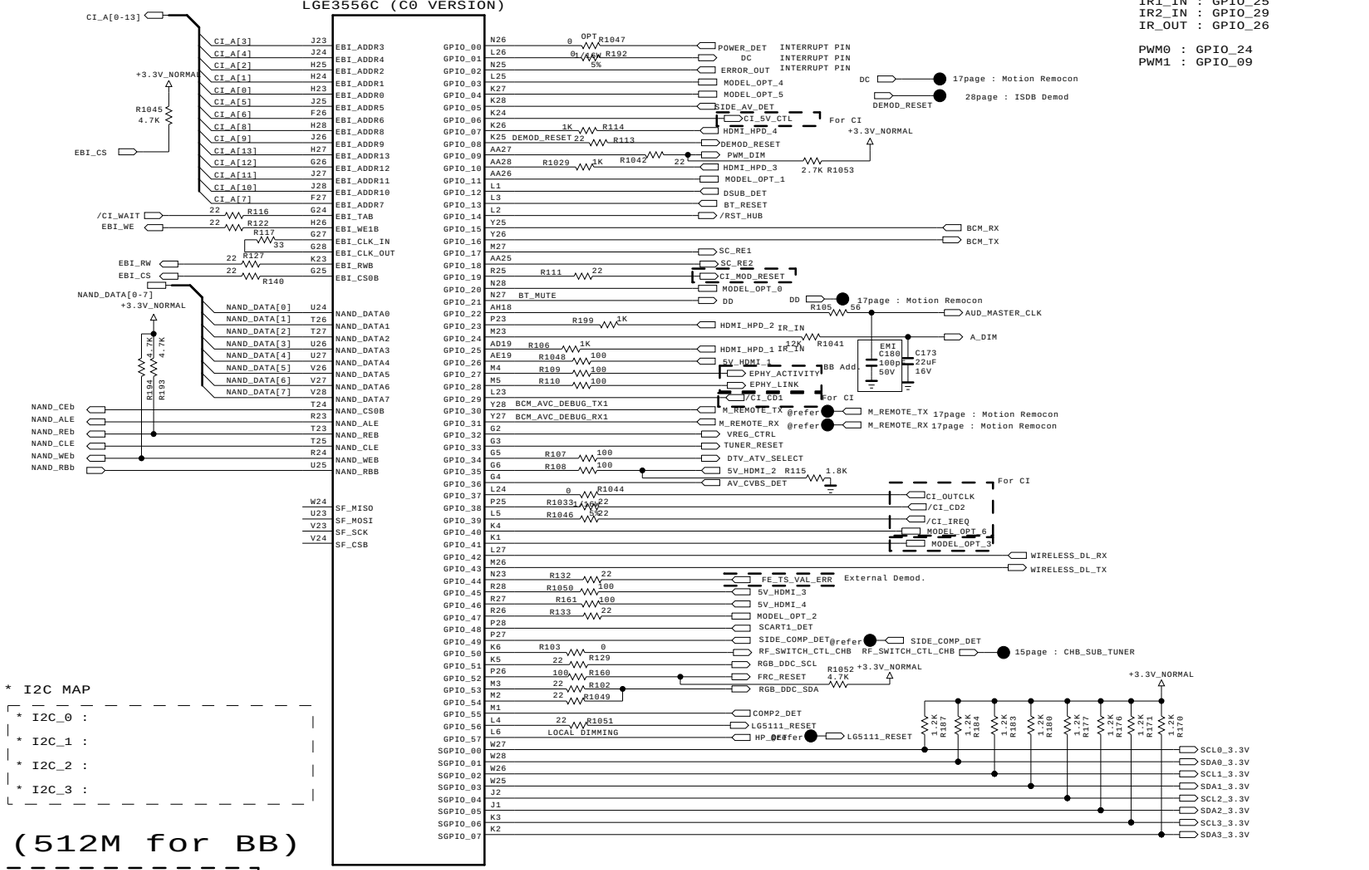

EXT IRQ
GPIO_00, GPIO_01, GPIO_02,
GPIO_11, GPIO_11, GPIO_39

IR_INT : GPIO_23
IR1_IN : GPIO_25
IR2_IN : GPIO_29
IR_OUT : GPIO_26

PWM0 : GPIO_24
PWM1 : GPIO_09

Boot Strap

Default Res. of all NAND pin is Pull-down

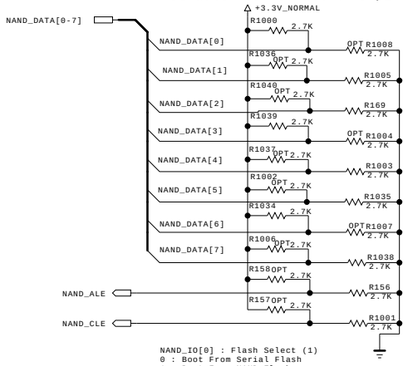

NAND_IO[0] : Flash Select (1)
0 : Boot From Serial Flash
1 : Boot From NAND Flash

NAND_IO[1] : NAND Block 0 Write (DNS)
0 : Enable Block 0 Write
1 : Disable Block 0 Write

NAND_IO[3:2] : NAND ECC (1, DNS)
00 : No ECC
01 : 1 ECC Bit
10 : 4 ECC Bit
11 : 8 ECC Bit

NAND_IO[4] : CPU Endian (0)
0 : Little Endian
1 : Big Endian

NAND_IO[6:5] : Xtal Bias Control (1, DNS)
00 : 1.2mA (Fundmental Recommand)
01 : 1.8mA
10 : 2.4mA (3rd over tune Recommand)
11 : 3.0mA

NAND_IO[7] : MIPS Frequency (DNS)
0 : 405MHz
1 : 378MHz

NAND_ALE : I2C Level (DNS)
0 : 3.3V Switching
1 : 5V Switching

NAND_CLE
0 : Enable D2CDIFF AC (DNS)
1 : Disabe D2CDIFF AC

* NAND FLASH MEMORY 4Gbit (512M for BB)

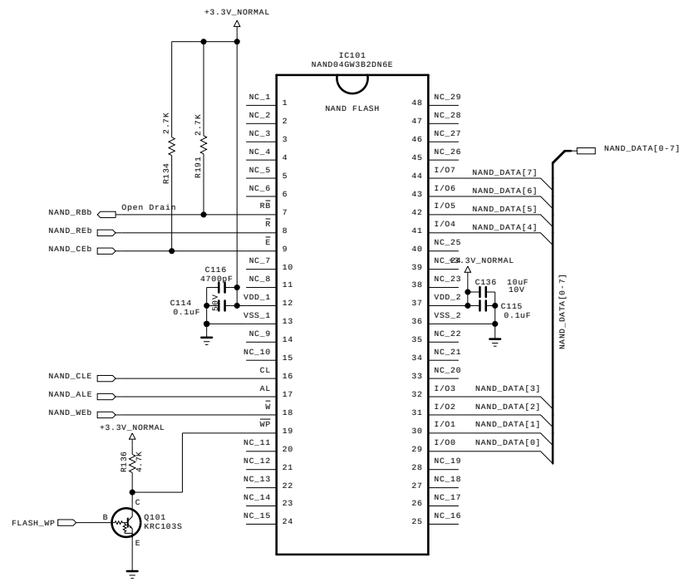

MODEL OPTION

PIN NAME	PIN NO.	HIGH	LOW
MODEL_OPT_0	N28	URSA3	NON_URSA3
MODEL_OPT_1	AA26	MAIN_MINI_LVDS	MAIN_LVDS
MODEL_OPT_2	R26	DDR-256M	DDR-512M
MODEL_OPT_3	K1	FHD	HD
MODEL_OPT_4	L25	FRC	NON_FRC
MODEL_OPT_5	K27	GIP	NON-GIP
MODEL_OPT_6	K4	OLED	NON_OLED

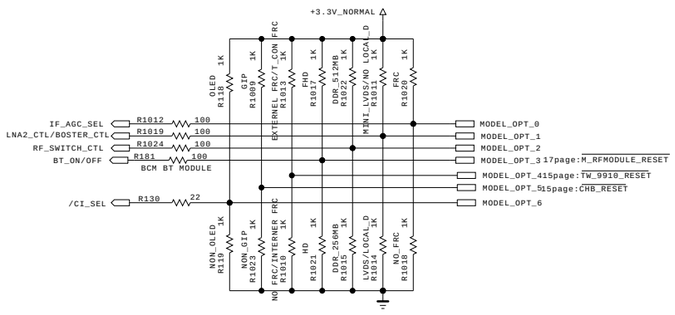

*MODEL_OPT_0 & MODEL_OPT_4
REFER TO THIS OPTION

MODEL_OPT_0	MODEL_OPT_4	
LOW	LOW	NO FRC
HIGH	LOW	URSA3 Internal
HIGH	HIGH	URSA3 External
LOW	HIGH	PWIZ Pannel T-con with LG FRC

FOR ESD 12V Pattern

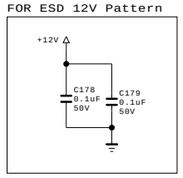

THE ⚠ SYMBOL MARK OF THIS SCHEMETIC DIAGRAM INCORPORATES SPECIAL FEATURES IMPORTANT FOR PROTECTION FROM X-RADIATION. FILRE AND ELECTRICAL SHOCK HAZARDS, WHEN SERVICING IF IS ESSENTIAL THAT ONLY MANUFATURES SPECFIED PARTS BE USED FOR THE CRITICAL COMPONENTS IN THE ⚠ SYMBOL MARK OF THE SCHEMETIC.

SECRET

LGElectronics

LG ELECTRONICS

MODEL	BCM (EUROBBTV)	DATE	2009.06.18
BLOCK	BCM3556 & NAND FLASH	SHEET	1

Copyright © 2010 LG Electronics. Inc. All rights reserved.
Only for training and service purposes

LGE Internal Use Only

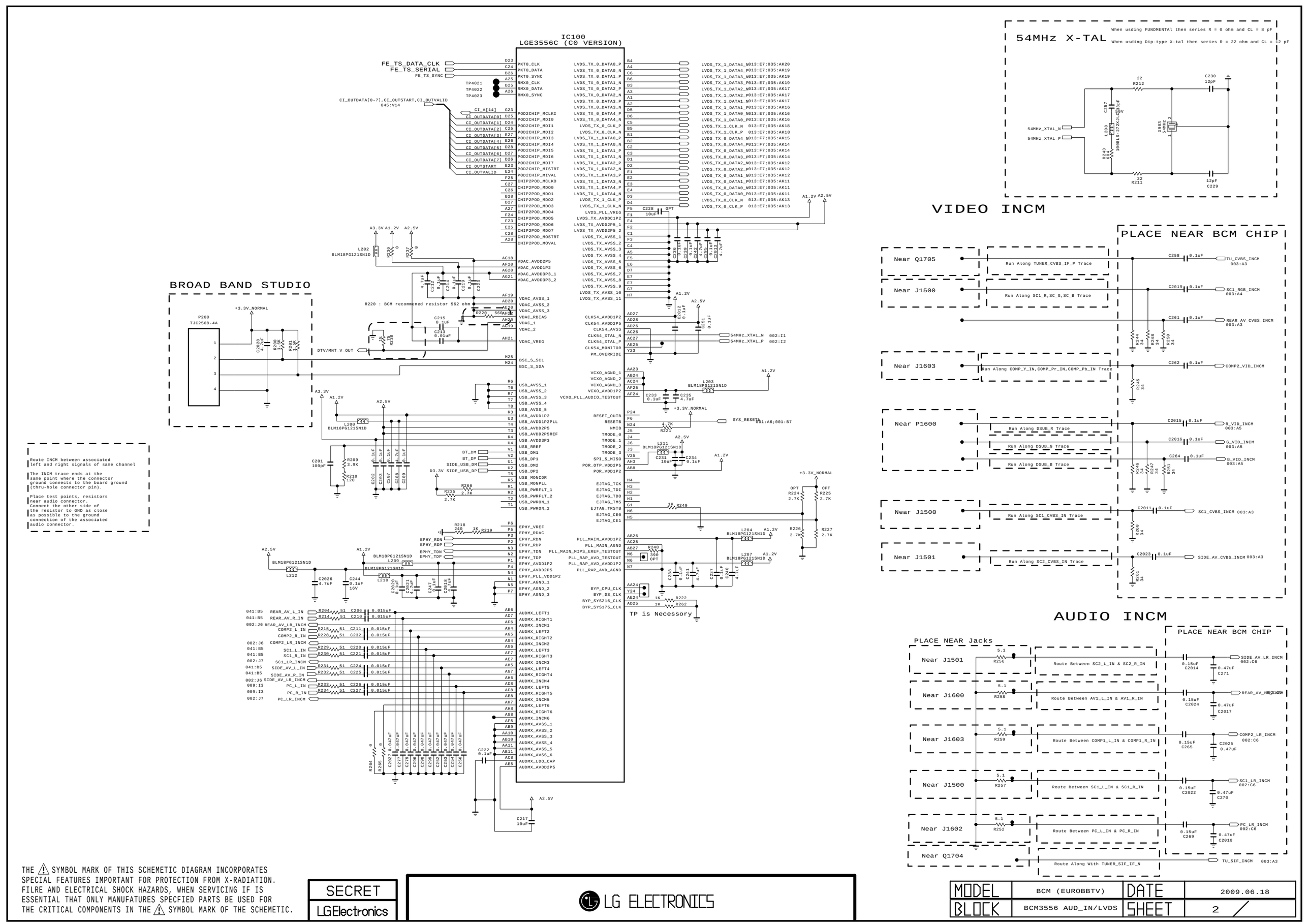

THE ⚠ SYMBOL MARK OF THIS SCHEMETIC DIAGRAM INCORPORATES SPECIAL FEATURES IMPORTANT FOR PROTECTION FROM X-RADIATION. FILRE AND ELECTRICAL SHOCK HAZARDS, WHEN SERVICING IF IS ESSENTIAL THAT ONLY MANUFATURES SPECFIED PARTS BE USED FOR THE CRITICAL COMPONENTS IN THE ⚠ SYMBOL MARK OF THE SCHEMETIC.

SECRET
LGElectronics

LG ELECTRONICS

MODEL	BCM (EUROBBTV)	DATE	2009.06.18
BLOCK	BCM3556 AUD_IN/LVDS	SHEET	2 /

Copyright © 2010 LG Electronics. Inc. All rights reserved.
Only for training and service purposes

LGE Internal Use Only

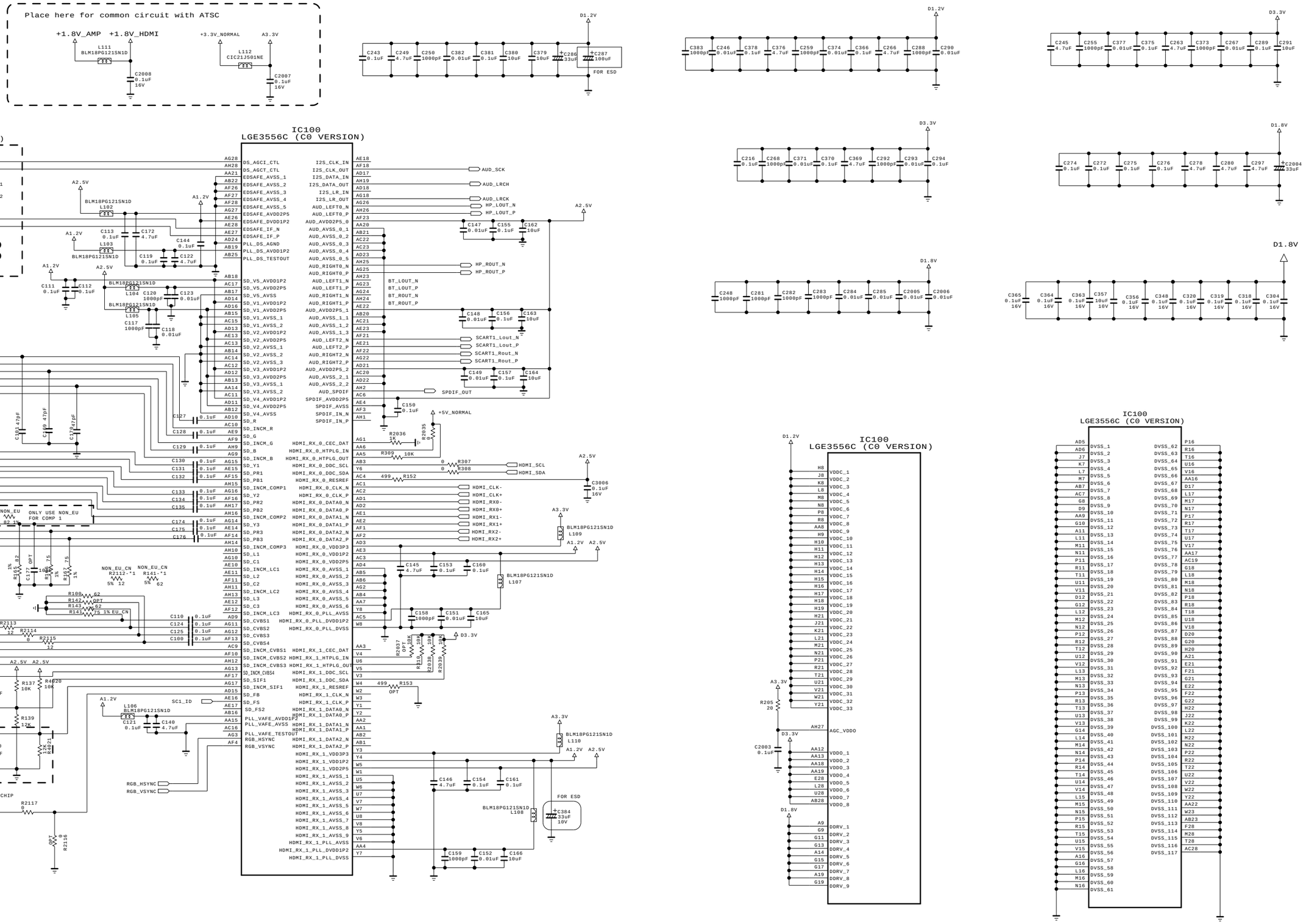

THE ⚠ SYMBOL MARK OF THIS SCHEMETIC DIAGRAM INCORPORATES SPECIAL FEATURES IMPORTANT FOR PROTECTION FROM X-RADIATION. FILRE AND ELECTRICAL SHOCK HAZARDS, WHEN SERVICING IF IS ESSENTIAL THAT ONLY MANUFATURES SPECFIED PARTS BE USED FOR THE CRITICAL COMPONENTS IN THE ⚠ SYMBOL MARK OF THE SCHEMETIC.

SECRET

LGElectronics

LG ELECTRONICS

MODEL	EUROBBTV	DATE	2009.06.18
BLOCK	BCM3556 VIDEO IN	SHEET	3

Copyright © 2010 LG Electronics. Inc. All rights reserved.
Only for training and service purposes

LGE Internal Use Only

THE ⚠ SYMBOL MARK OF THIS SCHEMETIC DIAGRAM INCORPORATES SPECIAL FEATURES IMPORTANT FOR PROTECTION FROM X-RADIATION. FILRE AND ELECTRICAL SHOCK HAZARDS, WHEN SERVICING IF IS ESSENTIAL THAT ONLY MANUFATURES SPECFIED PARTS BE USED FOR THE CRITICAL COMPONENTS IN THE ⚠ SYMBOL MARK OF THE SCHEMETIC.

SECRET

LGElectronics

HONG YEON HYUK

LG ELECTRONICS

MODEL	BCM (EUROBBTV)	DATE	2009.06.18
BLOCK	DDR Memory	SHEET	4 /

Copyright © 2010 LG Electronics. Inc. All rights reserved.
Only for training and service purposes

LGE Internal Use Only

COMPONENT1
COMPONENT2
AV1

JK1100
PPJ237-01

6C [RD1]E-LUG
5C [RD1]O-SPRING
4C [RD1]CONTACT
5B [WH1]O-SPRING
4A [YL1]CONTACT
5A [YL1]O-SPRING
6A [YL1]E-LUG
6H [RD2]E-LUG
5H [RD2]O-SPRING_2
4H [RD2]CONTACT
5G [WH2]O-SPRING
5F [RD2]O-SPRING_1
7F [RD2]E-LUG-S
5E [BL2]O-SPRING
7E [BL2]E-LUG-S
4D [GN2]CONTACT
5D [GN2]O-SPRING
6D [GN2]E-LUG
6N [RD3]E-LUG
5N [RD3]O-SPRING_2
4N [RD3]CONTACT
5M [WH3]O-SPRING
5L [RD3]O-SPRING_1
7L [RD3]E-LUG-S
5K [BL3]O-SPRING
7K [BL3]E-LUG-S
4J [GN3]CONTACT
5J [GN3]O-SPRING
6J [GN3]E-LUG

R1100 47 0

AV

+3.3V_NORMAL
R1101 10K
R1104 1K
D1100 5.6V
C1100 100pF 50V
AV_CVBS_DET 9:G3
C1101 1uF 25V
R1102 470K
R1105 0
C1103 100pF 50V
D1101 5.6V
REAR_AV_R_IN 10:B5;AF24
C1102 1uF 25V
R1103 470K
R1106 0
C1104 100pF 50V
D1102 5.6V
REAR_AV_L_IN 10:B5;AF22
D1103 5.1V
D1116 5.1V
R1107 0
C1105 47pF 50V
REAR_AV_CVBS 11:C4;AL18

COMPONENT1
<Practically COMP2>

+3.3V_NORMAL
R1112 10K
R1116 1K
D1115 5.6V
C1112 100pF 50V
SCART1_DET ==> COMP1_DET

C1114 25V 1uF
D1105 5.6V
R1109 470K
R1114 0
C1125 100pF
SC1_R_IN ==> COMP1_R_IN

C1113 25V 1uF
D1104 5.6V
R1108 470K
R1113 0
C1124 100pF
SC1_L_IN ==> COMP1_L_IN

L1102 270nH
D1106 5.5V
C1108 27pF 50V
C1120 27pF 50V
SC1_R ==> COMP1_Pr

L1100 270nH
D1107 5.5V
C1106 27pF 50V
C1118 27pF 50V
SC1_B ==> COMP1_Pb

L1101 270nH
D1108 5.1V
D1117 5.1V
C1107 27pF 50V
C1119 27pF 50V
SC1_G ==> COMP1_Y

COMPONENT2
<Practically COMP1>

+3.3V_NORMAL
R1115 10K
R1119 1K
D1109 5.6V
C1115 100pF 50V
COMP2_DET

C1117 25V 1uF
D1114 5.6V
R1111 470K
R1118 0
C1127 100pF
COMP2_R_IN

C1116 25V 1uF
D1110 5.6V
R1110 470K
R1117 0
C1126 100pF
COMP2_L_IN

L1103 270nH
D1111 5.5V
C1109 27pF 50V
C1121 27pF 50V
COMP2_Pr

L1104 270nH
D1112 5.5V
C1110 27pF 50V
C1122 27pF 50V
COMP2_Pb

L1105 270nH
D1113 5.1V
D1118 5.1V
C1111 27pF 50V
C1123 27pF 50V
COMP2_Y

NON_SCART

TP1100 DTV/MNT_V_OUT
TP1101 SC1_FB
TP1102 SC1_ID
TP1103 DTV_ATV_SELECT
TP1104 SCART1_Rout_P
TP1105 SCART1_Rout_N
TP1107 SC1_CVBS_IN
TP1108 SC_RE1
TP1109 SC_RE2
TP1110 SCART1_Lout_N
TP1111 SCART1_Lout_P

New Item Development
EARPHONE BLOCK

HP_LOUT
OPT C1130 1000pF 50V
OPT R1121 1K
OPT Q1100 MMBT3904-(F)
OPT Q1103 MMBT3904-(F)
JP8811
+3.3V_NORMAL
R1125 10K
JK1101 KJA-PH-0-0177
GND 5
L 4
DETECT 3
R 1
R1123 1K
HP_DET
HP_ROUT
OPT C1131 1000pF 50V
OPT R1122 1K
OPT Q1101 MMBT3904-(F)
OPT Q1102 MMBT3904-(F)
JP8812
+3.5V_ST
OPT R1124 10K
SIDE_HP_MUTE

EARPHONE AMP

+3.3V_NORMAL
L1106 10uH
C1137 10uF 10V
C1139 0.1uF 16V
R1131 0 1/16W
L1107 BG2012B080TF
HP_LOUT
C1142 0.22uF 16V
Close to the IC
C1136 1uF 10V
OUTL SGND VDD EN
HP_LOUT_N
HP_LOUT_P
HP_ROUT_N
HP_ROUT_P
C1132 1uF 10V
C1133 1uF 10V
C1134 1uF 10V
C1135 1uF 10V
IC1100 TPA6132A2
EAN60724701
INL- INL+ INR+ INR-
HPVDD CPP PGND CPN
C1140 2.2uF 10V
C1141 2.2uF 10V
R1129 100K OPT
OUTR G0 G1 HPVSS
R1120 4K
R1126 4K
R1128 4K
R1127 4.7K
C1138 2.2uF 10V
+3.3V_NORMAL
R1132 4.7K OPT
R1133 0
Q1104 2SC3052
R1134 1K
SIDE_HP_MUTE
R1130 0 1/16W
L1108 BG2012B080TF
HP_ROUT
C1143 0.22uF 16V

THE ⚠ SYMBOL MARK OF THIS SCHEMETIC DIAGRAM INCORPORATES SPECIAL FEATURES IMPORTANT FOR PROTECTION FROM X-RADIATION. FILRE AND ELECTRICAL SHOCK HAZARDS, WHEN SERVICING IF IS ESSENTIAL THAT ONLY MANUFATURES SPECFIED PARTS BE USED FOR THE CRITICAL COMPONENTS IN THE ⚠ SYMBOL MARK OF THE SCHEMETIC.

SECRET
LGElectronics

LG ELECTRONICS

MODEL	GP2_BCM	DATE	09/10/19
BLOCK	HP/COMP/REAR AV(NON_EU_CI)	SHEET	11 /

Copyright © 2010 LG Electronics. Inc. All rights reserved.
Only for training and service purposes

CAN H-NIM/NIM TUNER for TAIWAN

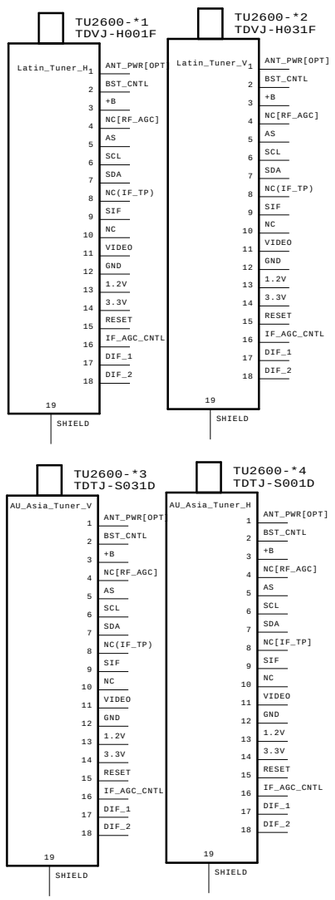

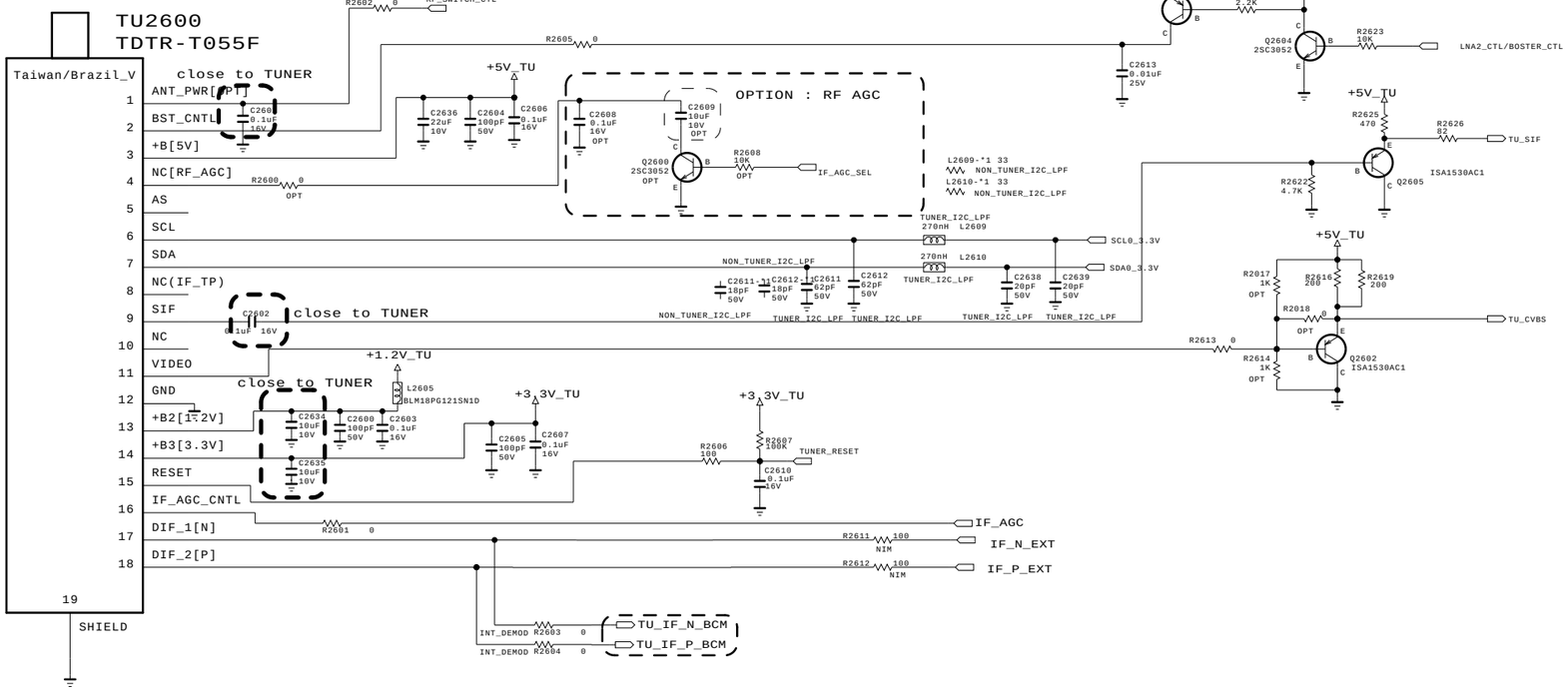

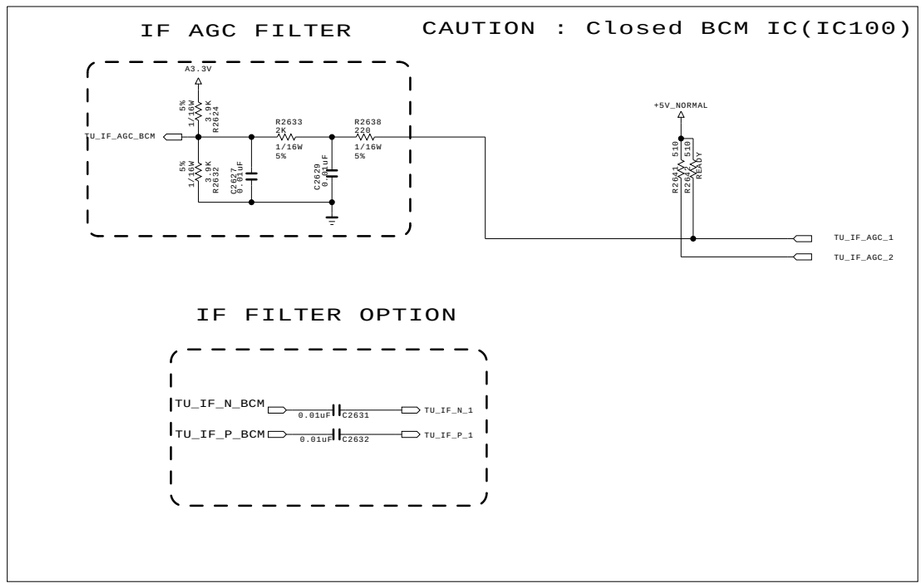

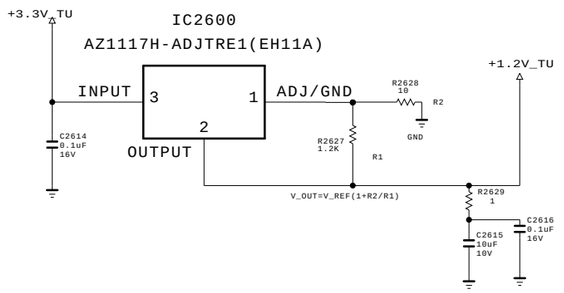

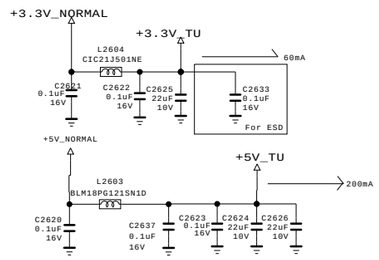

THE ⚠ SYMBOL MARK OF THIS SCHEMETIC DIAGRAM INCORPORATES SPECIAL FEATURES IMPORTANT FOR PROTECTION FROM X-RADIATION. FILRE AND ELECTRICAL SHOCK HAZARDS, WHEN SERVICING IF IS ESSENTIAL THAT ONLY MANUFATURES SPECFIED PARTS BE USED FOR THE CRITICAL COMPONENTS IN THE ⚠ SYMBOL MARK OF THE SCHEMETIC.

SECRET
LGElectronics

LG ELECTRONICS

MODEL	GP2_BCM	DATE	Ver. 1.0
BLOCK	Tuner (Half Nim)	SHEET	28

Copyright © 2010 LG Electronics. Inc. All rights reserved.
Only for training and service purposes

LGE Internal Use Only

PANASONIC (ISDB-T)
MN884433

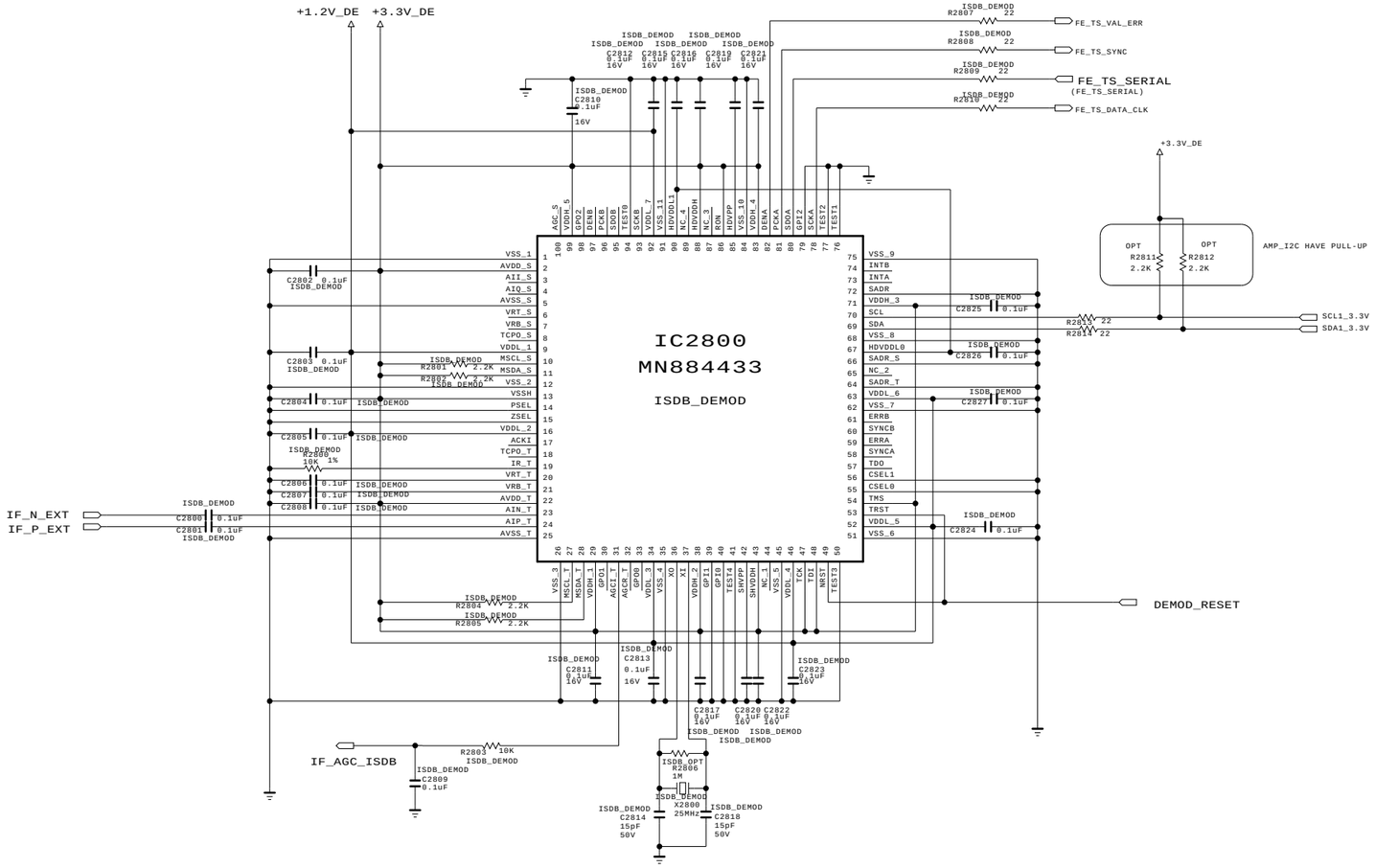

THE ⚠ SYMBOL MARK OF THIS SCHEMETIC DIAGRAM INCORPORATES SPECIAL FEATURES IMPORTANT FOR PROTECTION FROM X-RADIATION. FILRE AND ELECTRICAL SHOCK HAZARDS, WHEN SERVICING IF IS ESSENTIAL THAT ONLY MANUFATURES SPECFIED PARTS BE USED FOR THE CRITICAL COMPONENTS IN THE ⚠ SYMBOL MARK OF THE SCHEMETIC.

SECRET
LGElectronics

LG ELECTRONICS

MODEL	GP2_Saturn7M	DATE	Ver. 1.0
BLOCK	ISDB-T Demodulator	SHEET	28

Copyright © 2010 LG Electronics. Inc. All rights reserved.
Only for training and service purposes

LGE Internal Use Only

Panasonic Demodulator Power(3.3V,1.2V)

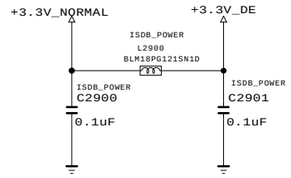

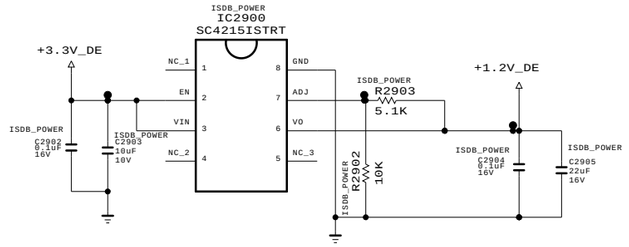

IF AGC SELECTION

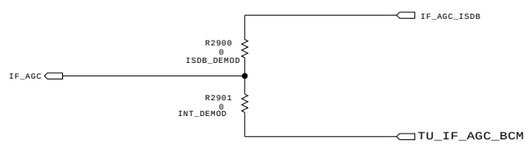

THE ⚠ SYMBOL MARK OF THIS SCHEMETIC DIAGRAM INCORPORATES SPECIAL FEATURES IMPORTANT FOR PROTECTION FROM X-RADIATION. FILRE AND ELECTRICAL SHOCK HAZARDS, WHEN SERVICING IF IS ESSENTIAL THAT ONLY MANUFATURES SPECFIED PARTS BE USED FOR THE CRITICAL COMPONENTS IN THE ⚠ SYMBOL MARK OF THE SCHEMETIC.

SECRET
LGElectronics

LG ELECTRONICS

MODEL	GP2_Saturn7M	DATE	Ver. 1.0
BLOCK	Demodulator	SHEET	29

Copyright © 2010 LG Electronics. Inc. All rights reserved.
Only for training and service purposes

LGE Internal Use Only

USB2 OPTION

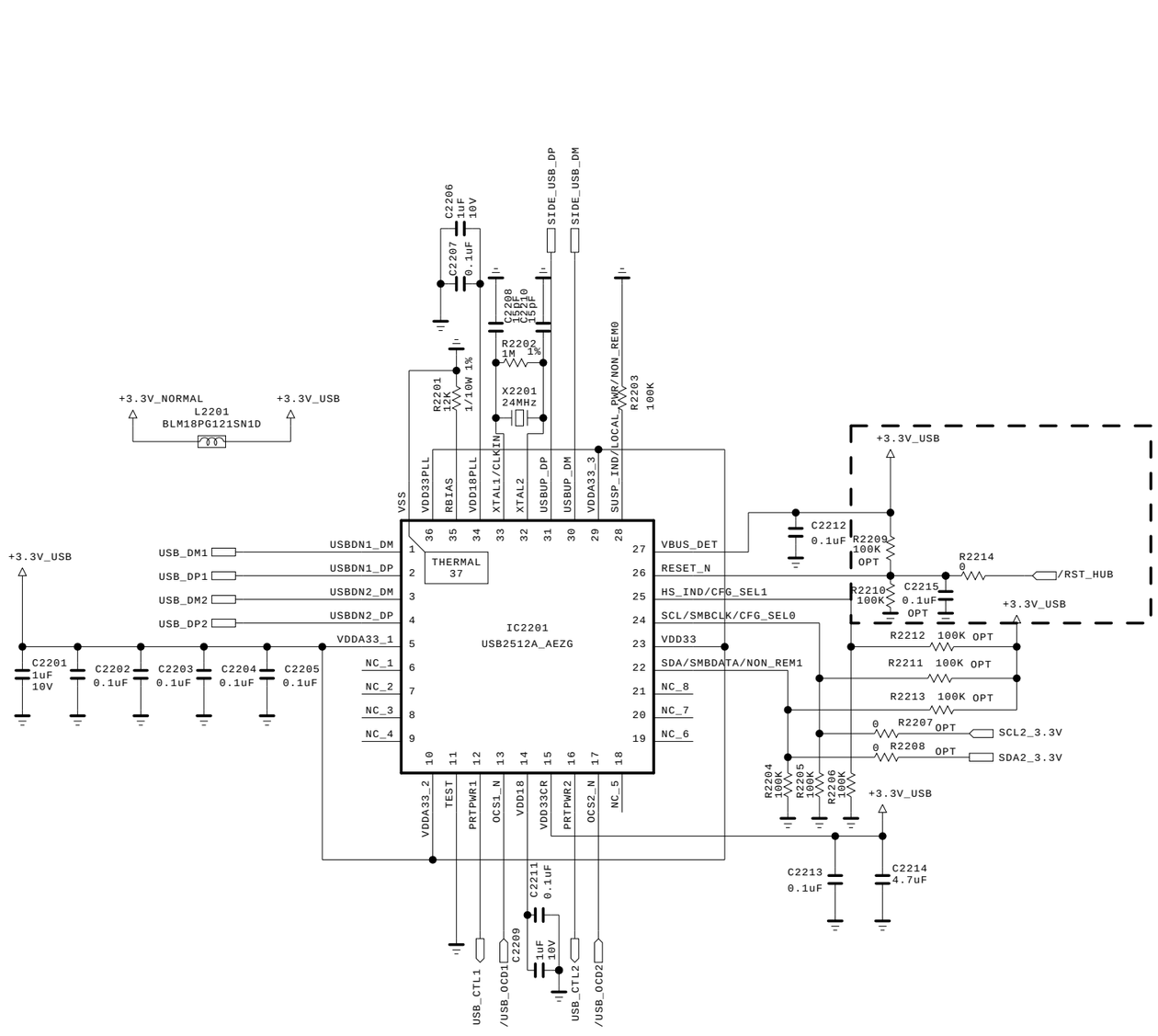

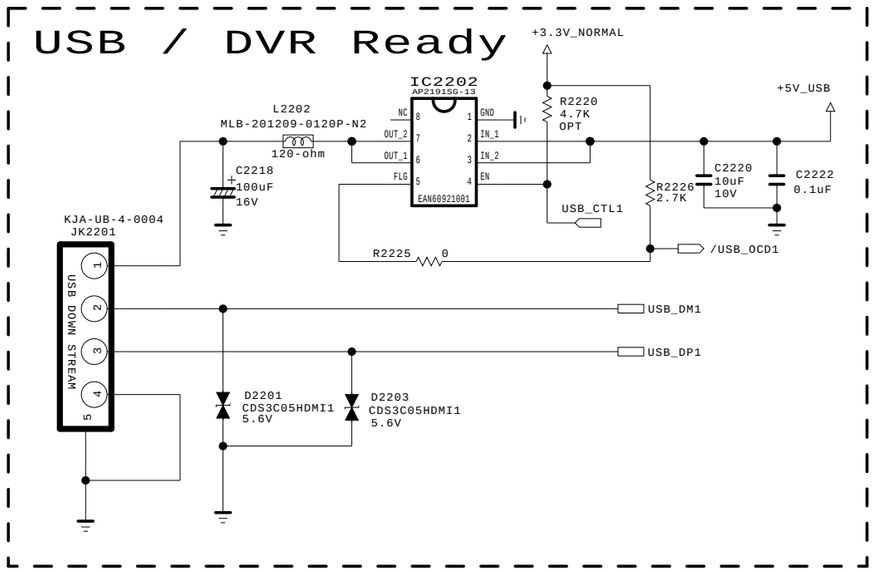

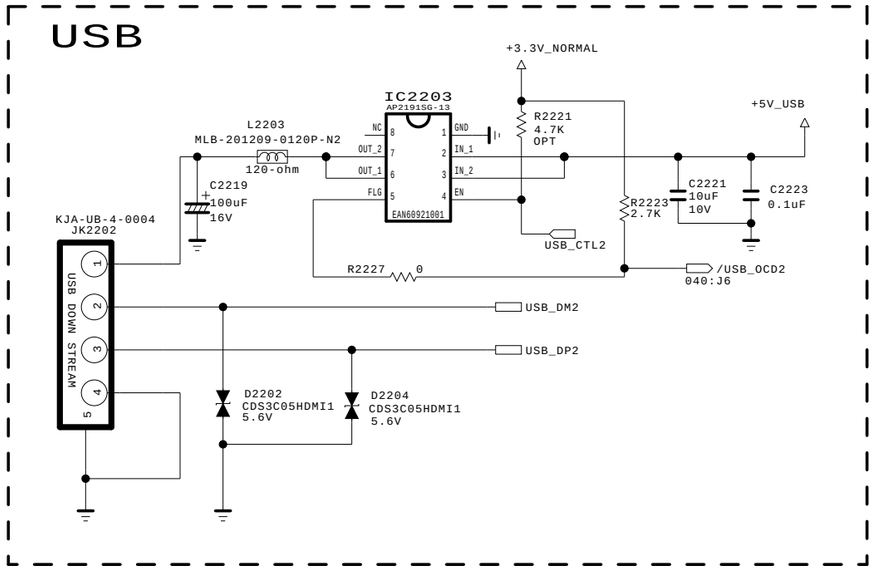

THE ⚠ SYMBOL MARK OF THIS SCHEMETIC DIAGRAM INCORPORATES SPECIAL FEATURES IMPORTANT FOR PROTECTION FROM X-RADIATION. FILRE AND ELECTRICAL SHOCK HAZARDS, WHEN SERVICING IF IS ESSENTIAL THAT ONLY MANUFATURES SPECFIED PARTS BE USED FOR THE CRITICAL COMPONENTS IN THE ⚠ SYMBOL MARK OF THE SCHEMETIC.

SECRET

LGElectronics

LG ELECTRONICS

MODEL		DATE	
BLOCK		SHEET	40

USB

Copyright © 2010 LG Electronics. Inc. All rights reserved.
Only for training and service purposes

LGE Internal Use Only

BLUETOOTH FOR BCM

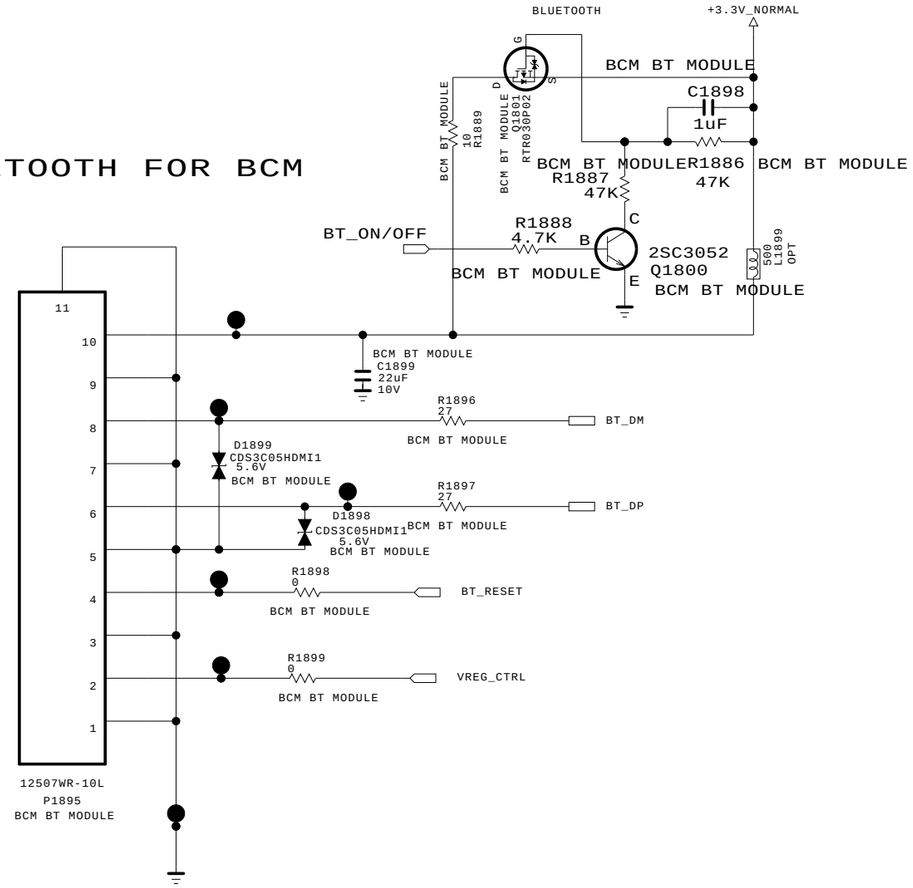

THE ⚠ SYMBOL MARK OF THIS SCHEMETIC DIAGRAM INCORPORATES SPECIAL FEATURES IMPORTANT FOR PROTECTION FROM X-RADIATION. FILRE AND ELECTRICAL SHOCK HAZARDS, WHEN SERVICING IF IS ESSENTIAL THAT ONLY MANUFATURES SPECFIED PARTS BE USED FOR THE CRITICAL COMPONENTS IN THE ⚠ SYMBOL MARK OF THE SCHEMETIC.

SECRET

LGElectronics

LG ELECTRONICS

MODEL		DATE	
BLOCK		SHEET	43

Copyright © 2010 LG Electronics. Inc. All rights reserved.
Only for training and service purposes

LGE Internal Use Only

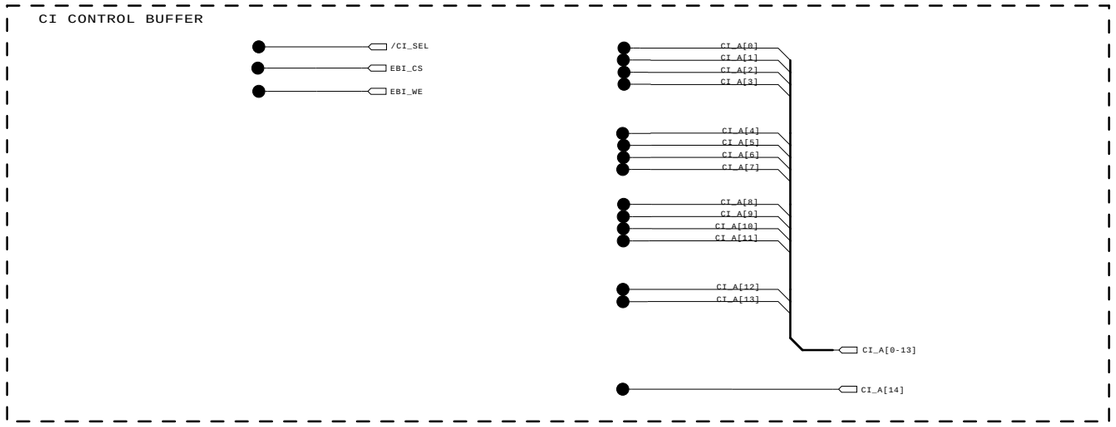

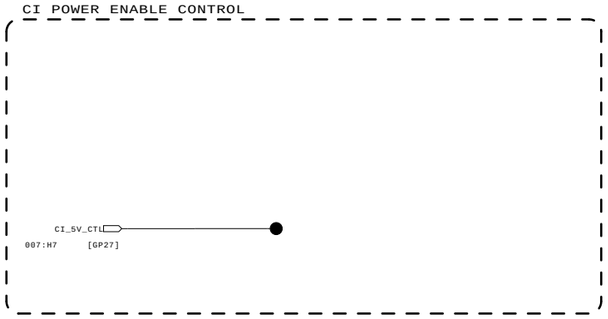

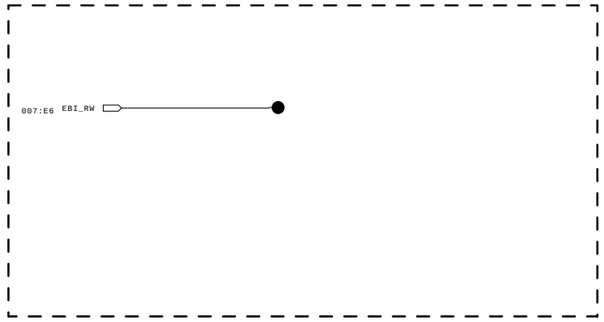

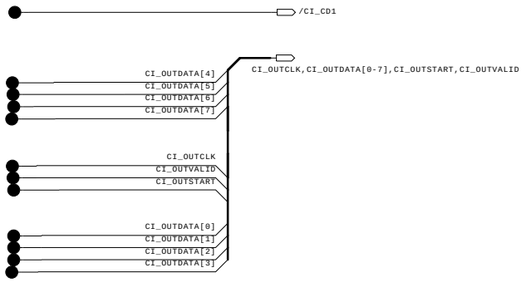

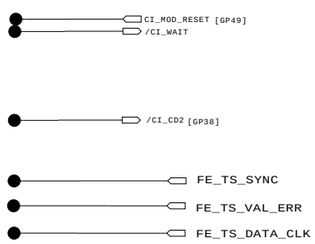

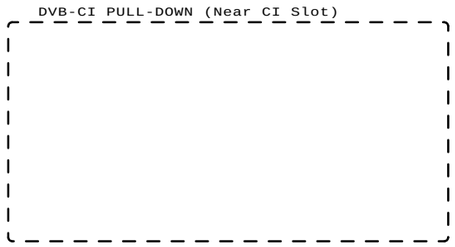

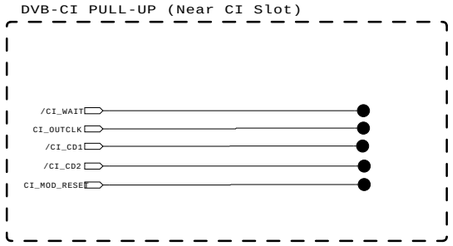

THE ⚠ SYMBOL MARK OF THIS SCHEMETIC DIAGRAM INCORPORATES SPECIAL FEATURES IMPORTANT FOR PROTECTION FROM X-RADIATION. FILRE AND ELECTRICAL SHOCK HAZARDS, WHEN SERVICING IF IS ESSENTIAL THAT ONLY MANUFATURES SPECFIED PARTS BE USED FOR THE CRITICAL COMPONENTS IN THE ⚠ SYMBOL MARK OF THE SCHEMETIC.

SECRET
LGElectronics

LG ELECTRONICS

MODEL	High_Common(BCM3556)	DATE	2009.10.19
BLOCK	Non_CI	SHEET	46

Copyright © 2010 LG Electronics. Inc. All rights reserved.
Only for training and service purposes

LGE Internal Use Only

Mini LVDS

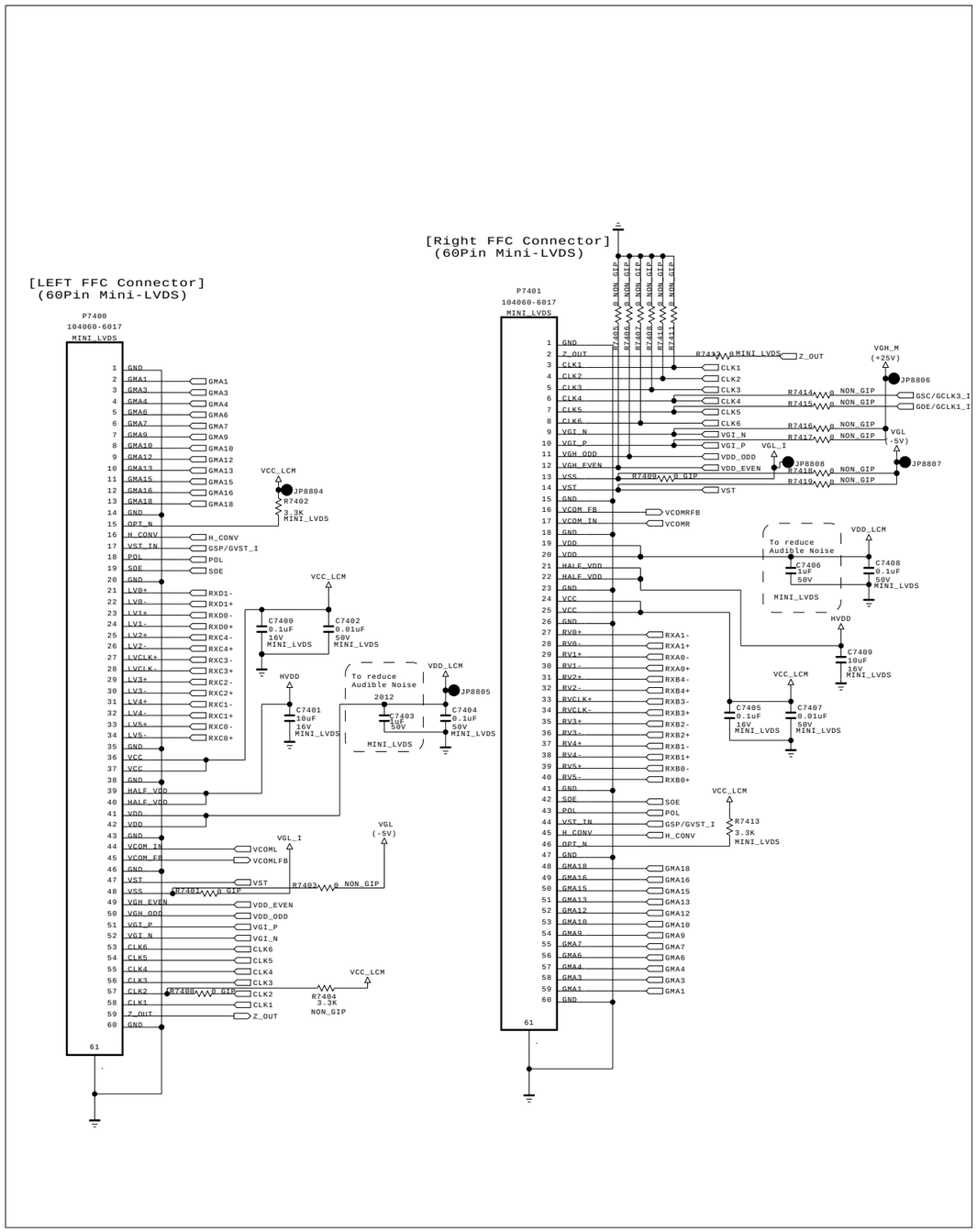

THE ⚠ SYMBOL MARK OF THIS SCHEMETIC DIAGRAM INCORPORATES SPECIAL FEATURES IMPORTANT FOR PROTECTION FROM X-RADIATION. FILRE AND ELECTRICAL SHOCK HAZARDS, WHEN SERVICING IF IS ESSENTIAL THAT ONLY MANUFATURES SPECFIED PARTS BE USED FOR THE CRITICAL COMPONENTS IN THE ⚠ SYMBOL MARK OF THE SCHEMETIC.

SECRET

LGElectronics

LG ELECTRONICS

MODEL	COMMON	DATE	09/10/xx
BLOCK	URSA3 120Hz MINI_LVDS	SHEET	74

Copyright © 2010 LG Electronics. Inc. All rights reserved.
Only for training and service purposes

LGE Internal Use Only

From BCM 480Hz

[51Pin LVDS Connector]
(For FHD 60/120Hz)

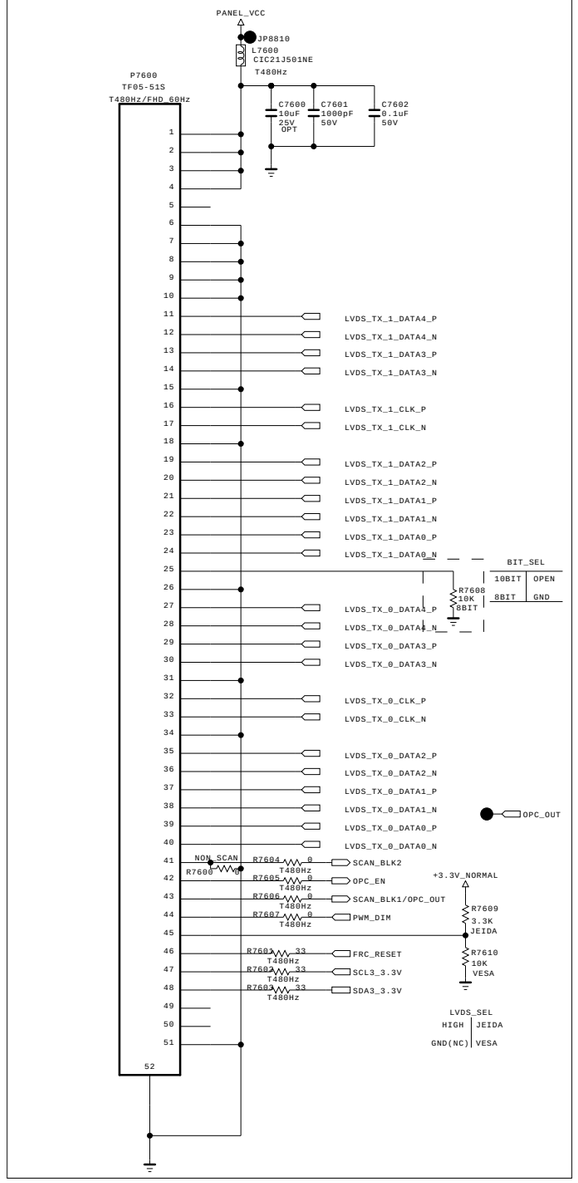

THE ⚠ SYMBOL MARK OF THIS SCHEMETIC DIAGRAM INCORPORATES SPECIAL FEATURES IMPORTANT FOR PROTECTION FROM X-RADIATION. FILRE AND ELECTRICAL SHOCK HAZARDS, WHEN SERVICING IF IS ESSENTIAL THAT ONLY MANUFATURES SPECFIED PARTS BE USED FOR THE CRITICAL COMPONENTS IN THE ⚠ SYMBOL MARK OF THE SCHEMETIC.

SECRET
LGElectronics

LG ELECTRONICS

MODEL		DATE	
BLOCK		SHEET	35

60Hz_LVDS

Copyright © 2010 LG Electronics. Inc. All rights reserved.
Only for training and service purposes

LVDS

[51Pin LVDS Connector] (For FHD 60/120Hz)

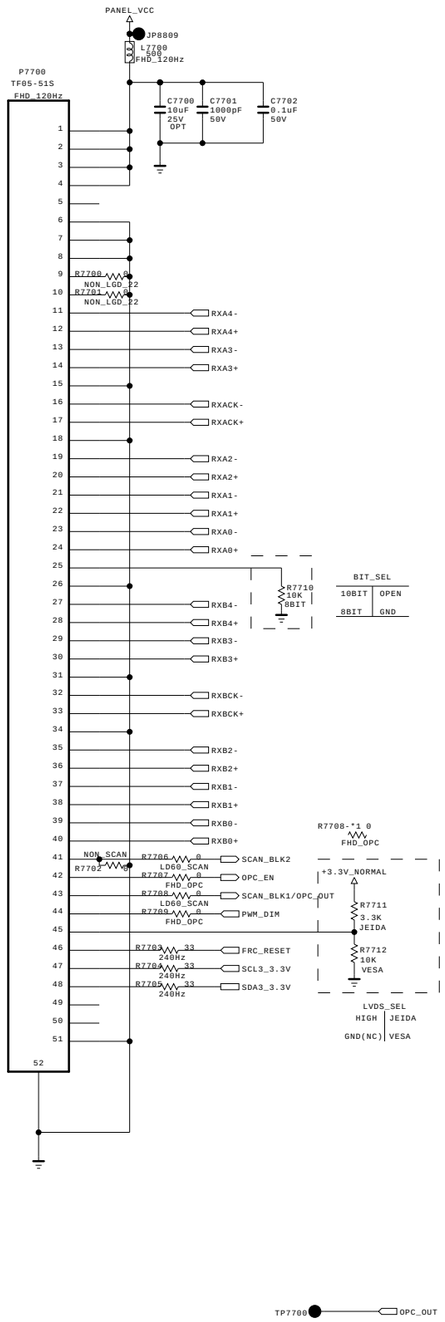

[41Pin LVDS Connector] (For FHD 120Hz)

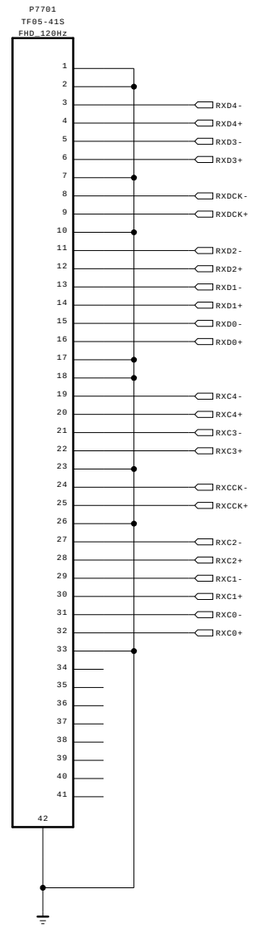

THE ⚠ SYMBOL MARK OF THIS SCHEMETIC DIAGRAM INCORPORATES SPECIAL FEATURES IMPORTANT FOR PROTECTION FROM X-RADIATION. FILRE AND ELECTRICAL SHOCK HAZARDS, WHEN SERVICING IF IS ESSENTIAL THAT ONLY MANUFATURES SPECFIED PARTS BE USED FOR THE CRITICAL COMPONENTS IN THE ⚠ SYMBOL MARK OF THE SCHEMETIC.

SECRET
LGElectronics

LG ELECTRONICS

MODEL		DATE	
BLOCK		SHEET	35

Copyright © 2010 LG Electronics. Inc. All rights reserved.
Only for training and service purposes

LGE Internal Use Only

FROM LIPS & POWER B/D

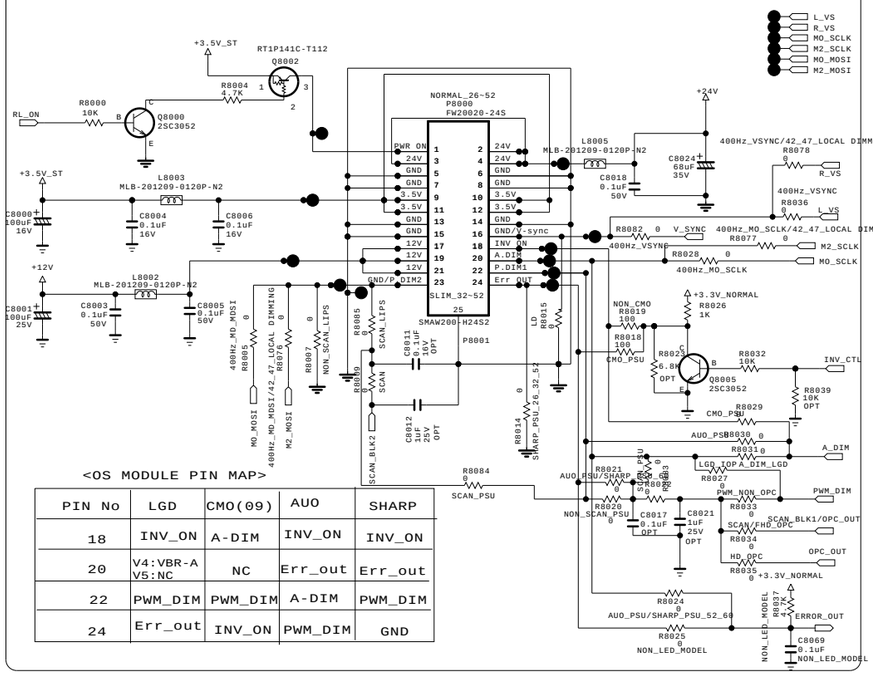

<OS MODULE PIN MAP>

PIN No	LGD	CMO(09)	AUO	SHARP
18	INV_ON	A-DIM	INV_ON	INV_ON
20	V4:VBR-A V5:NC	NC	Err_out	Err_out
22	PWM_DIM	PWM_DIM	A-DIM	PWM_DIM
24	Err_out	INV_ON	PWM_DIM	GND

+5V_NORMAL

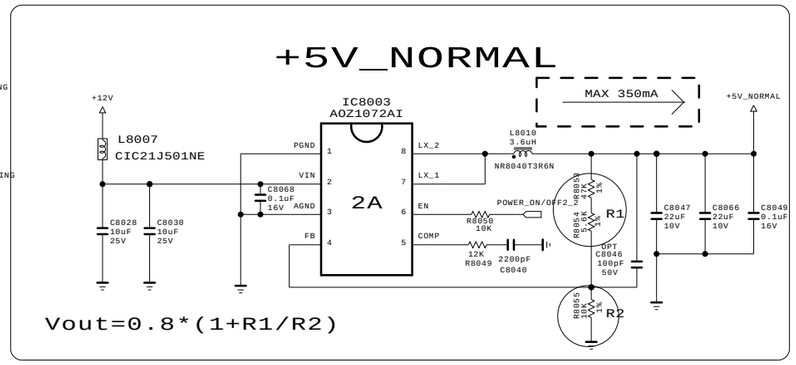

Vout=0.8*(1+R1/R2)

Power_DET

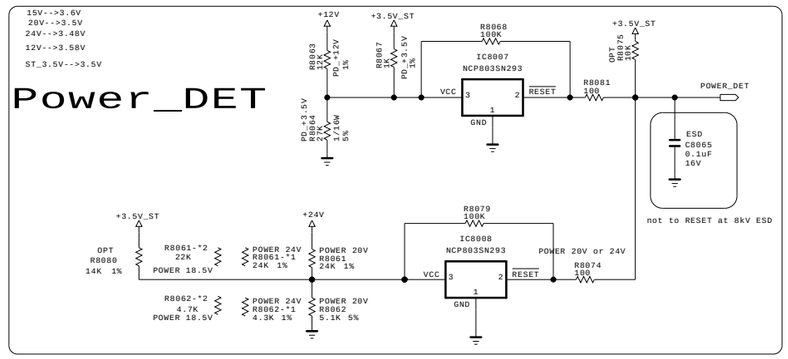

BCM core 1.2V volt

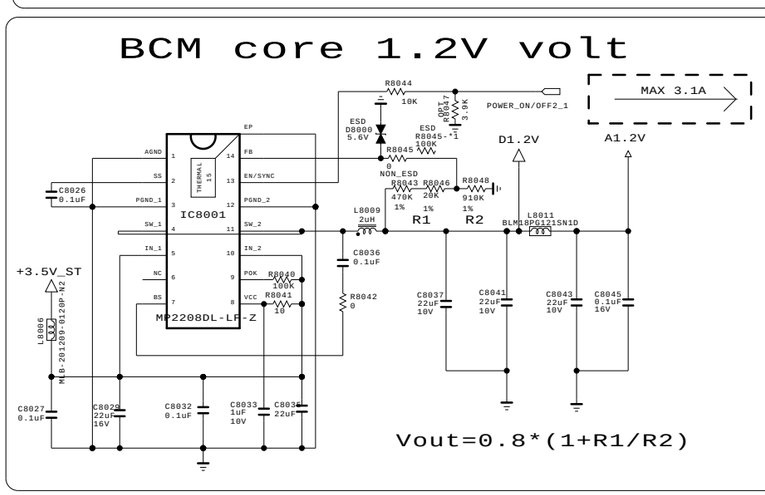

Vout=0.8*(1+R1/R2)

+3.3V_NORMAL

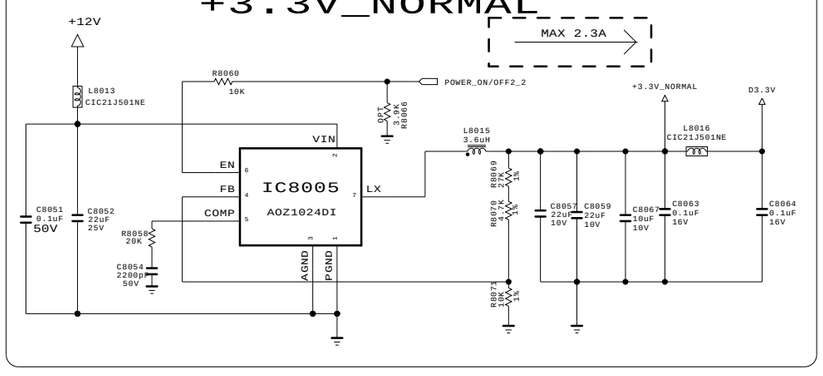

PANEL_POWER

+5V_USB

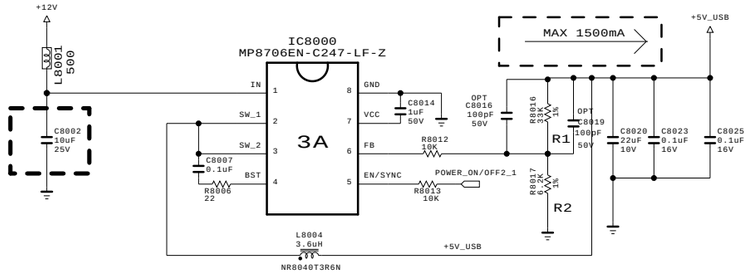

Vout=(1+R1/R2)*0.8

BCM DDR 1.8V

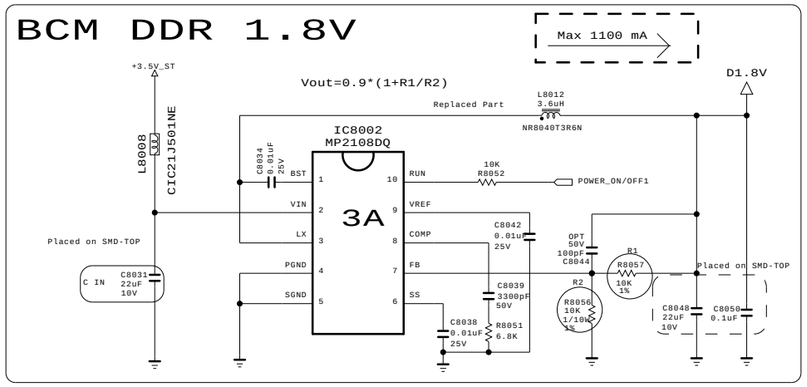

A2.5V

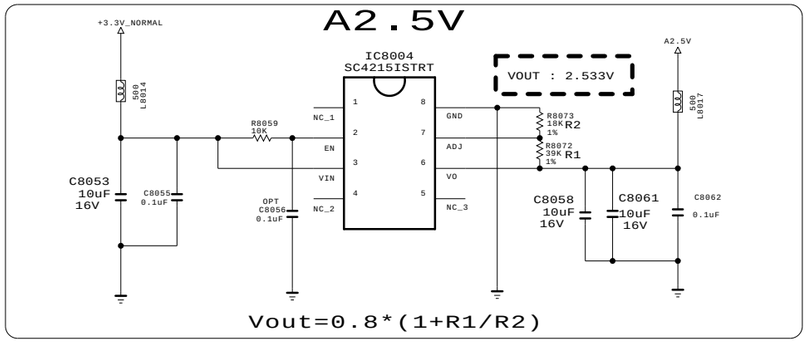

Vout=0.8*(1+R1/R2)

THE ⚠ SYMBOL MARK OF THIS SCHEMETIC DIAGRAM INCORPORATES SPECIAL FEATURES IMPORTANT FOR PROTECTION FROM X-RADIATION. FILRE AND ELECTRICAL SHOCK HAZARDS, WHEN SERVICING IF IS ESSENTIAL THAT ONLY MANUFATURES SPECFIED PARTS BE USED FOR THE CRITICAL COMPONENTS IN THE ⚠ SYMBOL MARK OF THE SCHEMETIC.

SECRET
LGElectronics

LG ELECTRONICS

MODEL	BCM (EUROBBTV)	DATE	
BLOCK	POWER	SHEET	15

Copyright © 2010 LG Electronics. Inc. All rights reserved.
Only for training and service purposes

LGE Internal Use Only

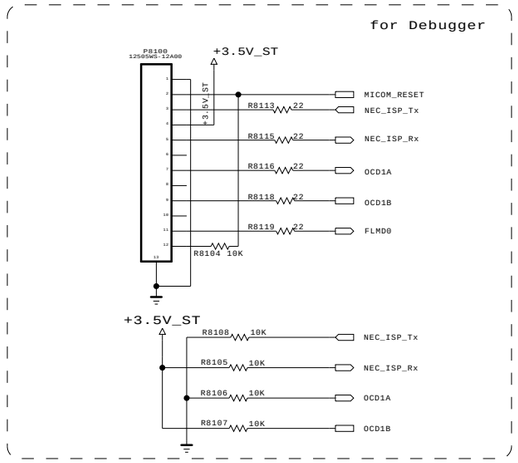

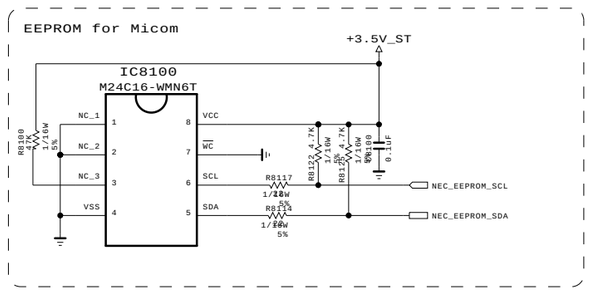

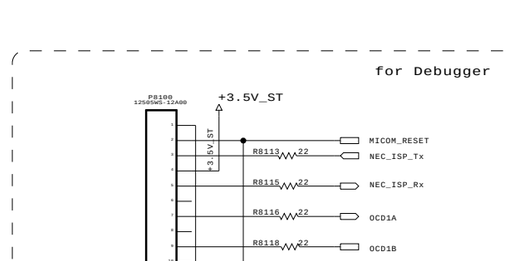

MODEL OPTION

PIN NAME	PIN NO.	HIGH	LOW
MODEL_OPT_0	8	OLED/3D	LCD/PDP
MODEL_OPT_1	11	LOGO_BUZZ	PWM_LED
MODEL_OPT_2	30	TOUCH_KEY	TACT_KEY
MODEL_OPT_3	31	PDP/3D	LCD/OLED

	LCD	PDP	OLED	3D
MODEL_OPT_0	0	0	1	1
MODEL_OPT_3	0	1	0	1

	LOW	LOW_SMALL	TBD	HIGH
MODEL_OPT_1	0	0	1	1
MODEL_OPT_2	0	1	0	1

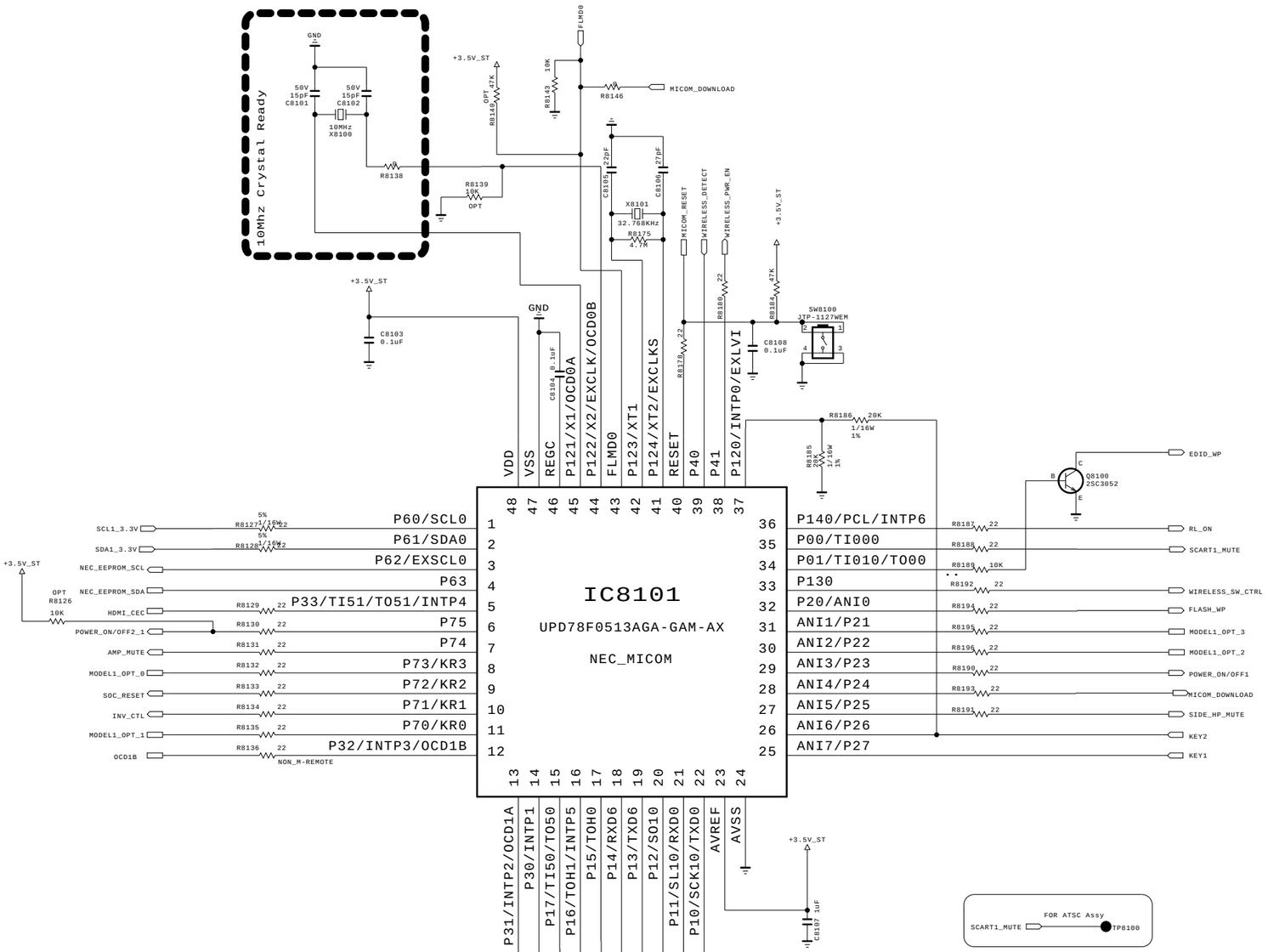

THE ⚠ SYMBOL MARK OF THIS SCHEMETIC DIAGRAM INCORPORATES SPECIAL FEATURES IMPORTANT FOR PROTECTION FROM X-RADIATION. FILRE AND ELECTRICAL SHOCK HAZARDS, WHEN SERVICING IF IS ESSENTIAL THAT ONLY MANUFATURES SPECFIED PARTS BE USED FOR THE CRITICAL COMPONENTS IN THE ⚠ SYMBOL MARK OF THE SCHEMETIC.

SECRET
LGElectronics

LG ELECTRONICS

MODEL	GP2_Saturn7M	DATE	Ver. 1.4
BLOCK	MICOM	SHEET	5 /

Copyright © 2010 LG Electronics. Inc. All rights reserved.
Only for training and service purposes

LGE Internal Use Only

IR & KEY

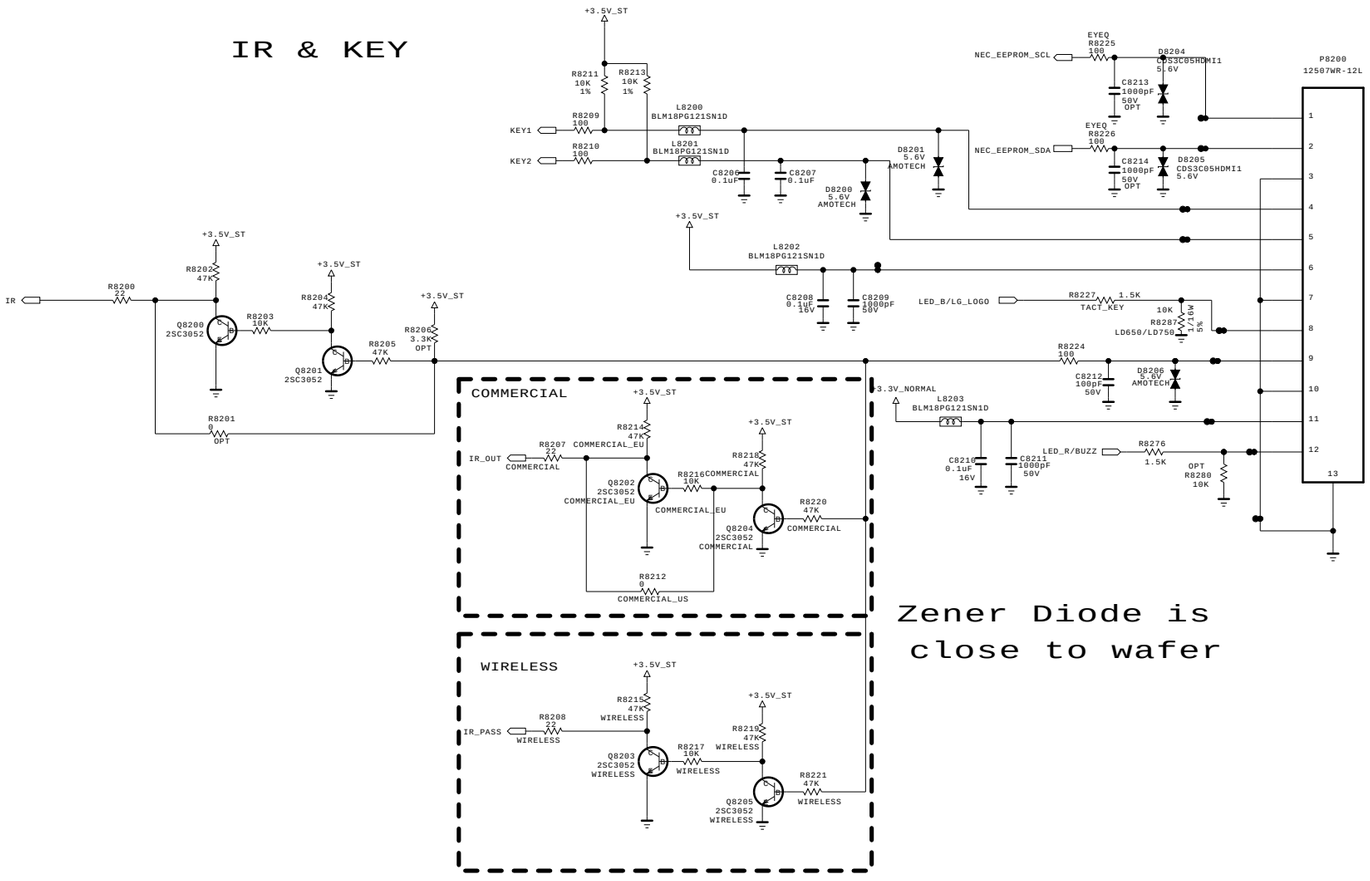

Zener Diode is close to wafer

ETHERNET CONNECT

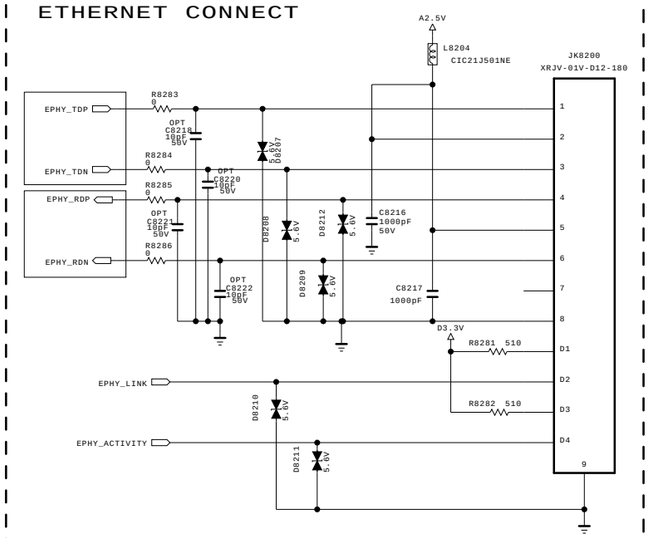

Trace impedance : 100 ohm differenctial impedance to GND plane
5 mils trace width with 7 mils air gap on P/N pair.
Adjacent TX/RX differential pairs should be separated by more than 15 mils to each other

RS232C

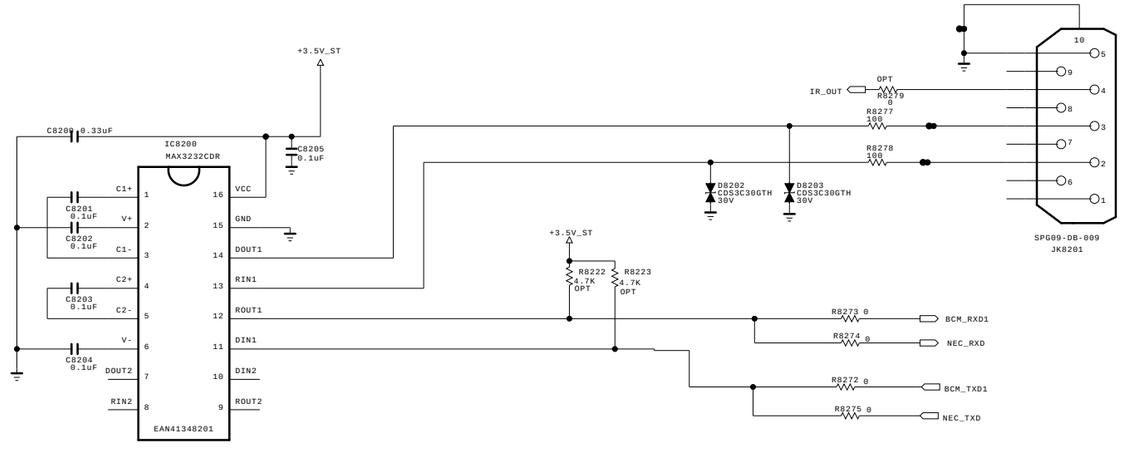

THE ⚠ SYMBOL MARK OF THIS SCHEMETIC DIAGRAM INCORPORATES SPECIAL FEATURES IMPORTANT FOR PROTECTION FROM X-RADIATION. FILRE AND ELECTRICAL SHOCK HAZARDS, WHEN SERVICING IF IS ESSENTIAL THAT ONLY MANUFATURES SPECFIED PARTS BE USED FOR THE CRITICAL COMPONENTS IN THE ⚠ SYMBOL MARK OF THE SCHEMETIC.

SECRET

LGElectronics

LG ELECTRONICS

MODEL		DATE	
BLOCK		SHEET	/

Copyright © 2010 LG Electronics. Inc. All rights reserved.
Only for training and service purposes

LGE Internal Use Only

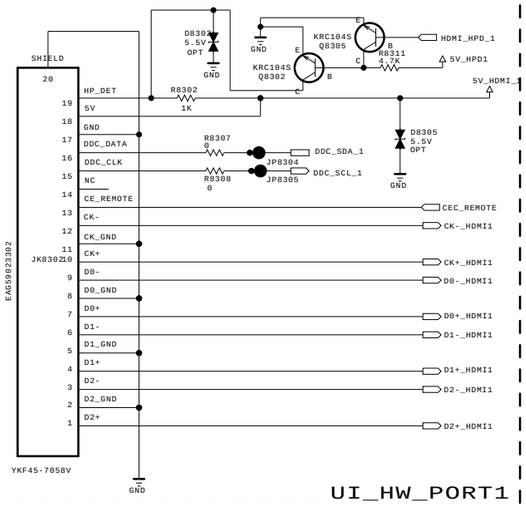

UI_HW_PORT1

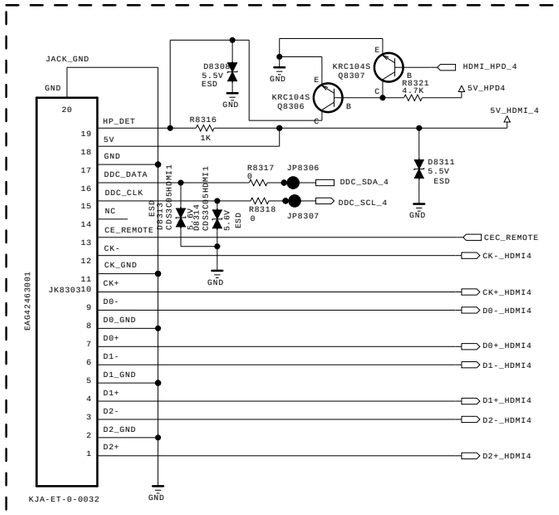

SIDE_HDMI_PORT4

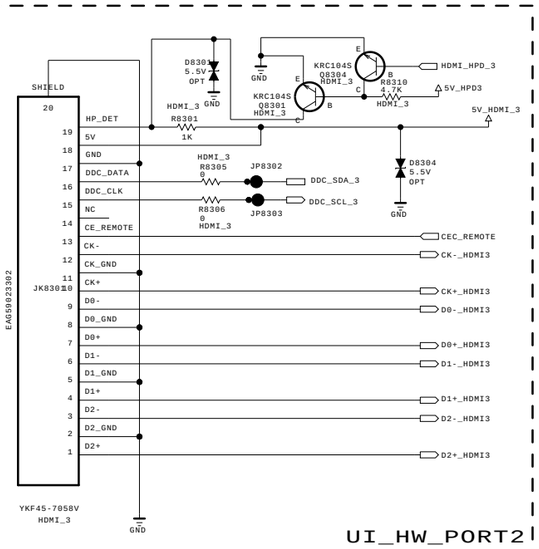

UI_HW_PORT2

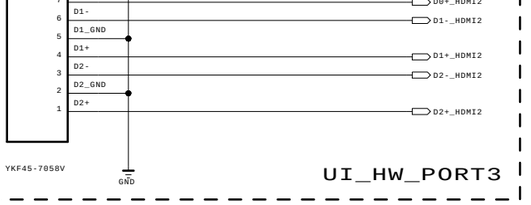

UI_HW_PORT3

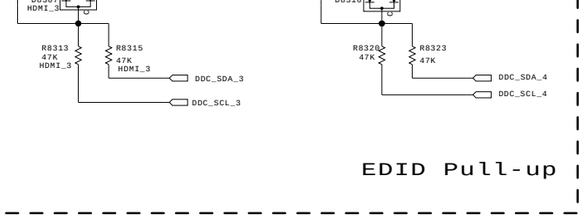

EDID Pull-up

* HDMI CEC

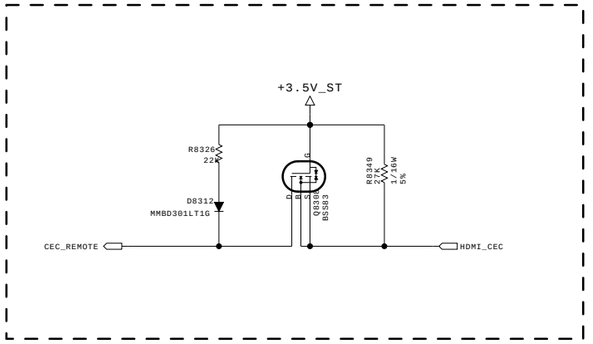

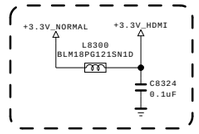

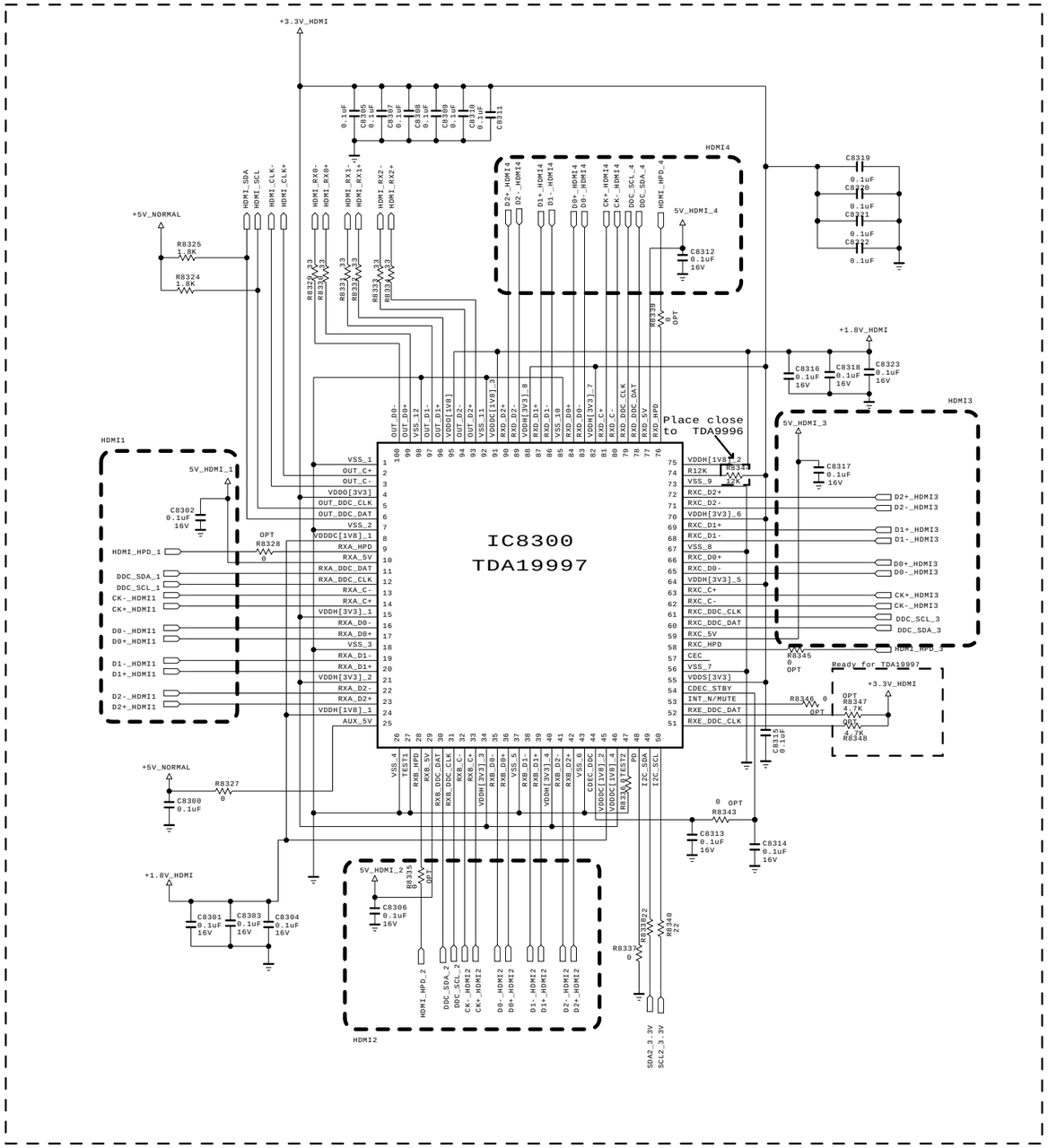

THE ⚠ SYMBOL MARK OF THIS SCHEMETIC DIAGRAM INCORPORATES SPECIAL FEATURES IMPORTANT FOR PROTECTION FROM X-RADIATION. FILRE AND ELECTRICAL SHOCK HAZARDS, WHEN SERVICING IF IS ESSENTIAL THAT ONLY MANUFATURES SPECFIED PARTS BE USED FOR THE CRITICAL COMPONENTS IN THE ⚠ SYMBOL MARK OF THE SCHEMETIC.

SECRET

LGElectronics

LEE GI YOUNG

LG ELECTRONICS

MODEL	BCM (EUROBBTV)	DATE	2009.06.18
BLOCK	HDMI	SHEET	8 /

Copyright © 2010 LG Electronics. Inc. All rights reserved.
Only for training and service purposes

LGE Internal Use Only

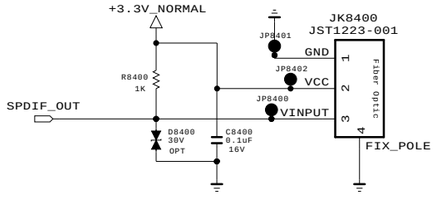

RGB_PC

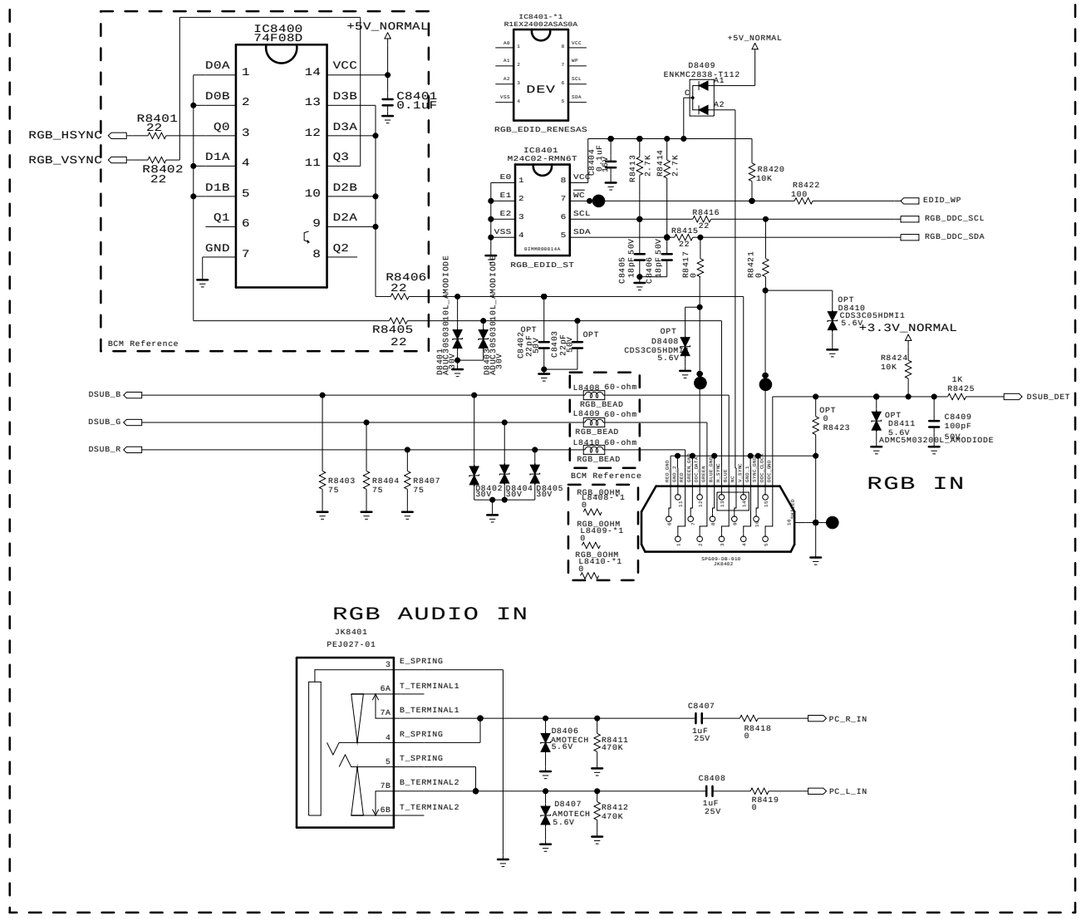

RGB AUDIO IN

THE ⚠ SYMBOL MARK OF THIS SCHEMETIC DIAGRAM INCORPORATES SPECIAL FEATURES IMPORTANT FOR PROTECTION FROM X-RADIATION. FILRE AND ELECTRICAL SHOCK HAZARDS, WHEN SERVICING IF IS ESSENTIAL THAT ONLY MANUFATURES SPECFIED PARTS BE USED FOR THE CRITICAL COMPONENTS IN THE ⚠ SYMBOL MARK OF THE SCHEMETIC.

SECRET

LGElectronics

LG ELECTRONICS

MODEL	EUROBBTV	DATE	2009.06.18
BLOCK	ETC SUB BOARD I/F	SHEET	9 /

Copyright © 2010 LG Electronics. Inc. All rights reserved.
Only for training and service purposes

LGE Internal Use Only

(New Item Developmen H:9.2mm)

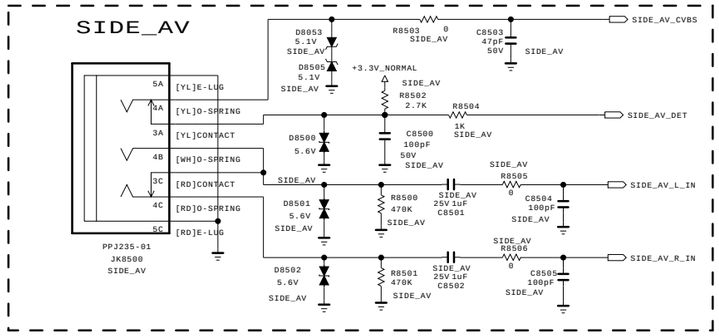

THE ⚠ SYMBOL MARK OF THIS SCHEMETIC DIAGRAM INCORPORATES SPECIAL FEATURES IMPORTANT FOR PROTECTION FROM X-RADIATION. FILRE AND ELECTRICAL SHOCK HAZARDS, WHEN SERVICING IF IS ESSENTIAL THAT ONLY MANUFATURES SPECFIED PARTS BE USED FOR THE CRITICAL COMPONENTS IN THE ⚠ SYMBOL MARK OF THE SCHEMETIC.

SECRET
LGElectronics

LG ELECTRONICS

MODEL		DATE	
BLOCK		SHEET	/

SIDE_AV

Copyright © 2010 LG Electronics. Inc. All rights reserved.
Only for training and service purposes

LGE Internal Use Only

WIRELESS READY MODEL

Wireless power

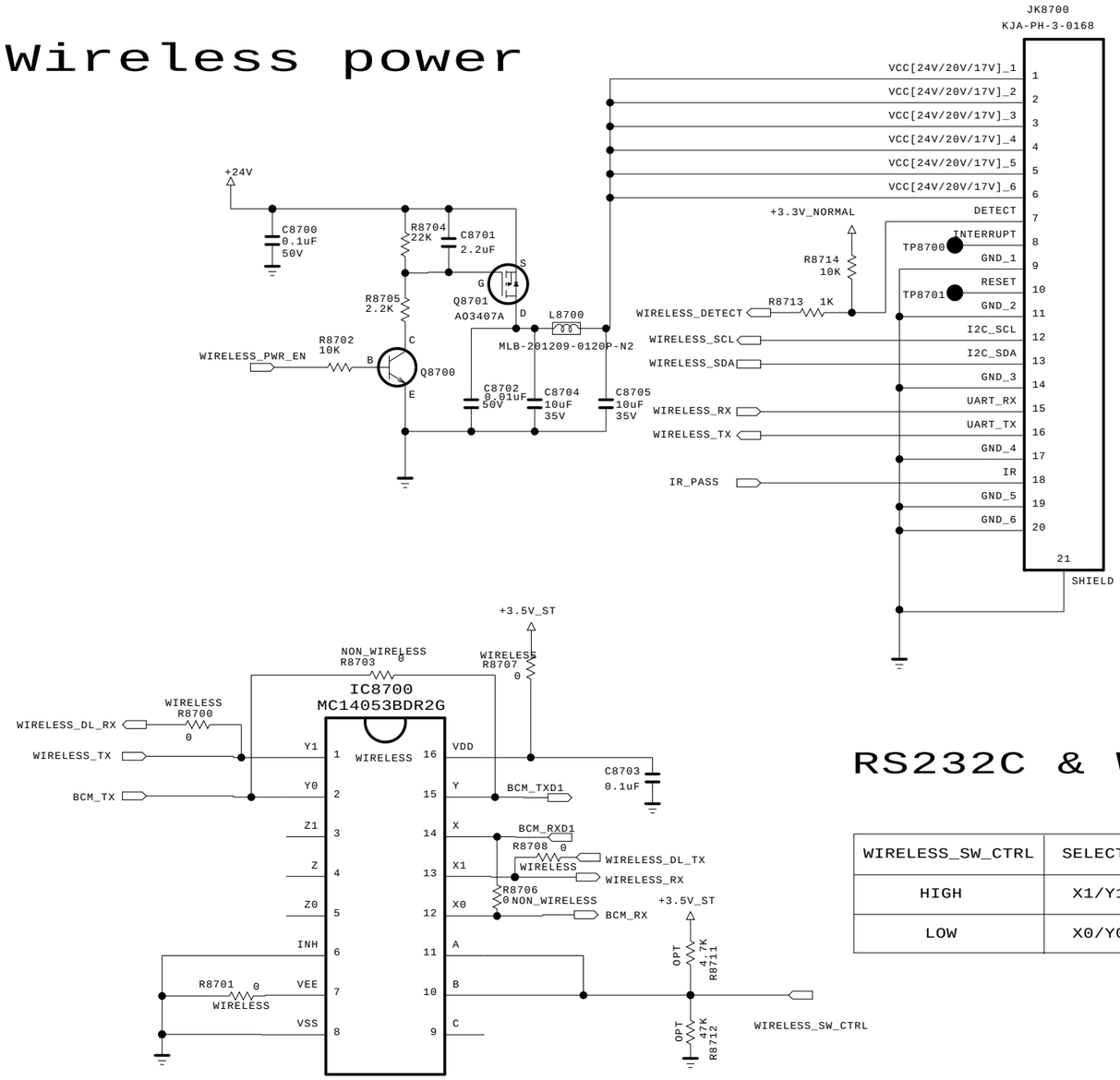

RS232C & Wireless

WIRELESS_SW_CTRL	SELECT PIN	STATUS
HIGH	X1/Y1/Z1	WIRELESS Dongle connect --> WIRELESS RS232
LOW	X0/Y0/Z0	WIRELESS Dongle Dis_con --> S7 RS232

THE ⚠ SYMBOL MARK OF THIS SCHEMETIC DIAGRAM INCORPORATES SPECIAL FEATURES IMPORTANT FOR PROTECTION FROM X-RADIATION. FILRE AND ELECTRICAL SHOCK HAZARDS, WHEN SERVICING IF IS ESSENTIAL THAT ONLY MANUFATURES SPECFIED PARTS BE USED FOR THE CRITICAL COMPONENTS IN THE ⚠ SYMBOL MARK OF THE SCHEMETIC.

SECRET
LGElectronics

LG ELECTRONICS

MODEL		DATE	
BLOCK		SHEET	12

Copyright © 2010 LG Electronics. Inc. All rights reserved.
Only for training and service purposes

LGE Internal Use Only

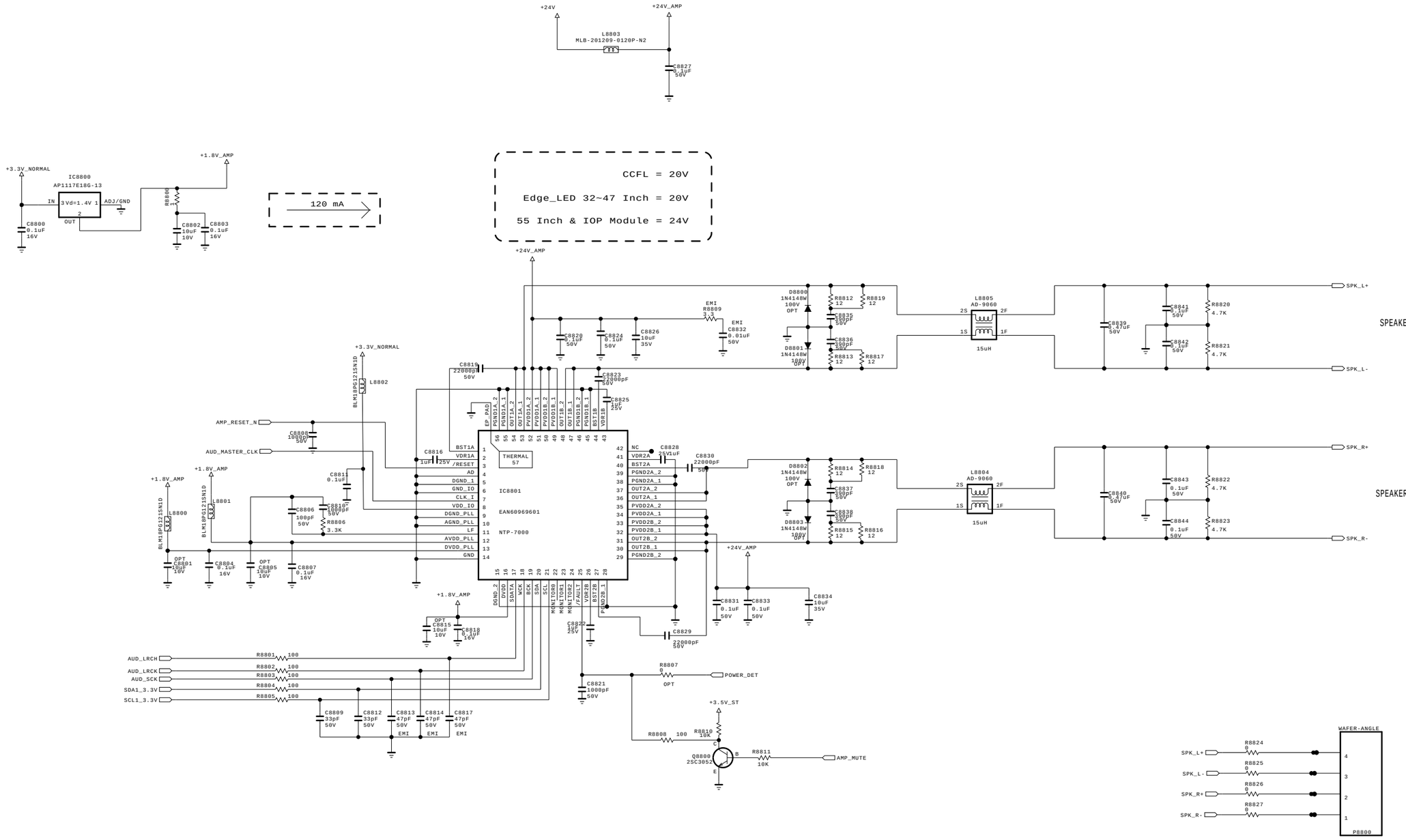

THE ⚠ SYMBOL MARK OF THIS SCHEMETIC DIAGRAM INCORPORATES SPECIAL FEATURES IMPORTANT FOR PROTECTION FROM X-RADIATION. FILRE AND ELECTRICAL SHOCK HAZARDS, WHEN SERVICING IF IS ESSENTIAL THAT ONLY MANUFATURES SPECFIED PARTS BE USED FOR THE CRITICAL COMPONENTS IN THE ⚠ SYMBOL MARK OF THE SCHEMETIC.

SECRET
LGElectronics

KIM JONG HYUN

LG ELECTRONICS

MODEL	BCM (EUROBBTV)	DATE	2009.06.18
BLOCK	NTP7000	SHEET	38

Copyright © 2010 LG Electronics. Inc. All rights reserved.
Only for training and service purposes

LGE Internal Use Only

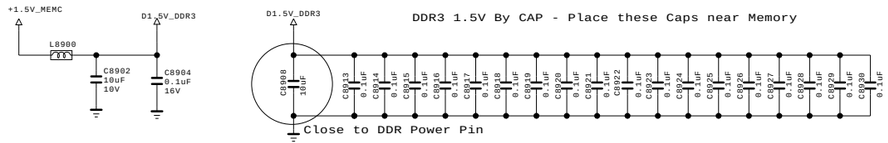

DDR3 1.5V By CAP - Place these Caps near Memory

C8913 0.1uF
C8914 0.1uF
C8915 0.1uF
C8916 0.1uF
C8917 0.1uF
C8918 0.1uF
C8919 0.1uF
C8920 0.1uF
C8921 0.1uF
C8922 0.1uF
C8923 0.1uF
C8924 0.1uF
C8925 0.1uF
C8926 0.1uF
C8927 0.1uF
C8928 0.1uF
C8929 0.1uF
C8930 0.1uF

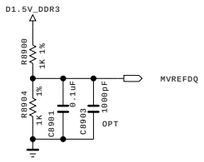

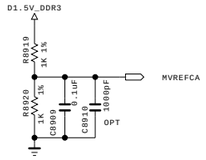

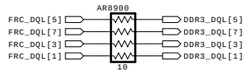

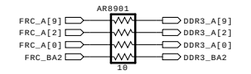

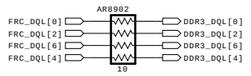

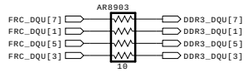

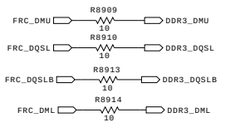

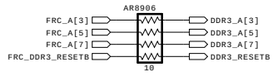

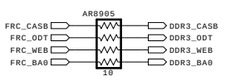

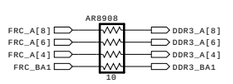

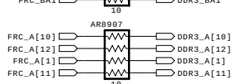

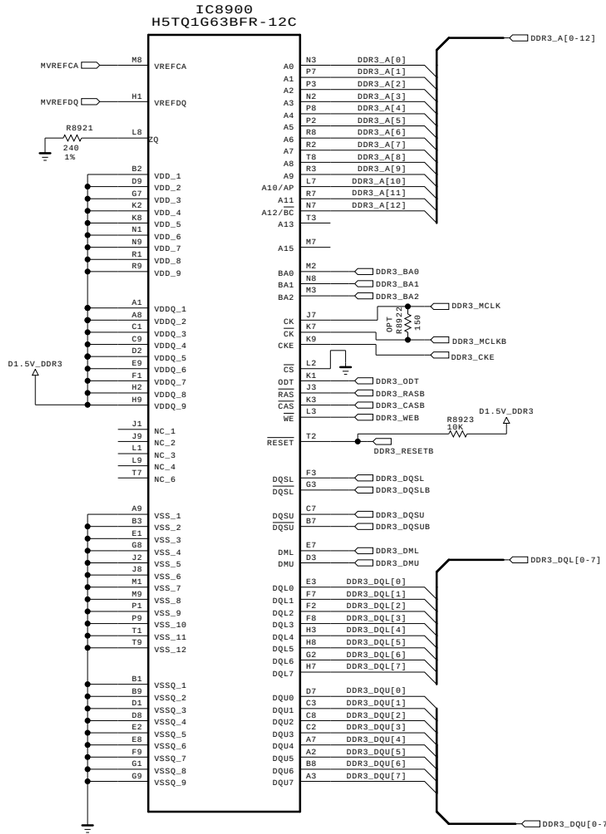

+3.3V_MEMC

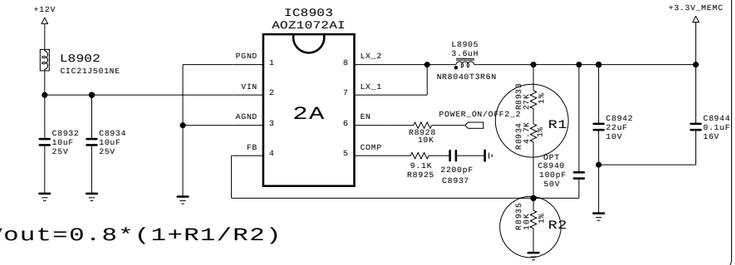

Vout=0.8*(1+R1/R2)

URSA3 DDR3 1.5V

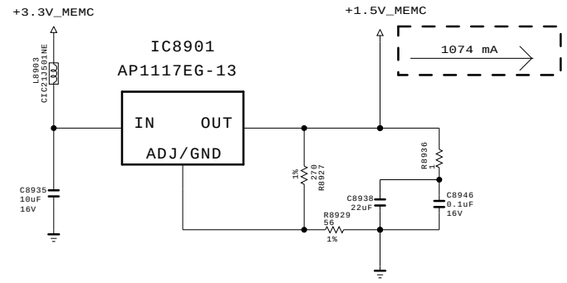

URSA3 CORE 1.26V

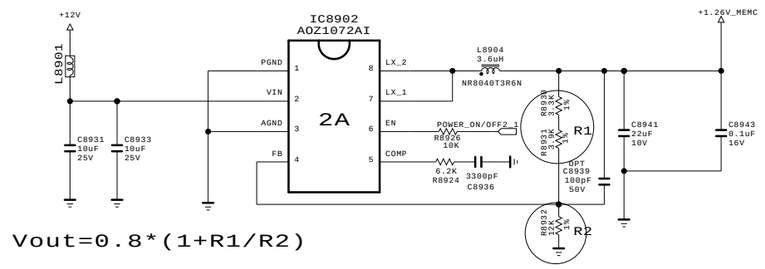

Vout=0.8*(1+R1/R2)

THE ⚠ SYMBOL MARK OF THIS SCHEMETIC DIAGRAM INCORPORATES SPECIAL FEATURES IMPORTANT FOR PROTECTION FROM X-RADIATION. FILRE AND ELECTRICAL SHOCK HAZARDS, WHEN SERVICING IF IS ESSENTIAL THAT ONLY MANUFATURES SPECFIED PARTS BE USED FOR THE CRITICAL COMPONENTS IN THE ⚠ SYMBOL MARK OF THE SCHEMETIC.

SECRET

LGElectronics

LG ELECTRONICS

MODEL	COMMON	DATE	2009.09.11
BLOCK	URSA3 DDR & Power	SHEET	89

Copyright © 2010 LG Electronics. Inc. All rights reserved.
Only for training and service purposes

LGE Internal Use Only

Serial Flash

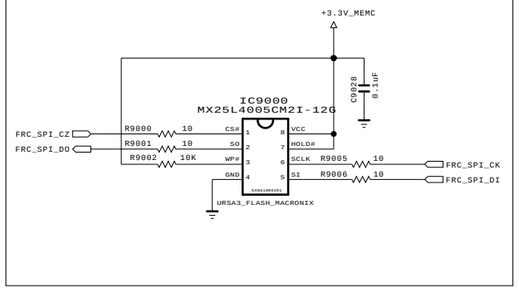

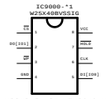

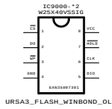

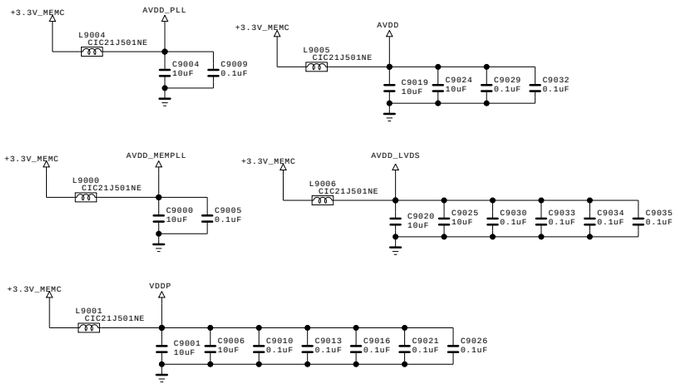

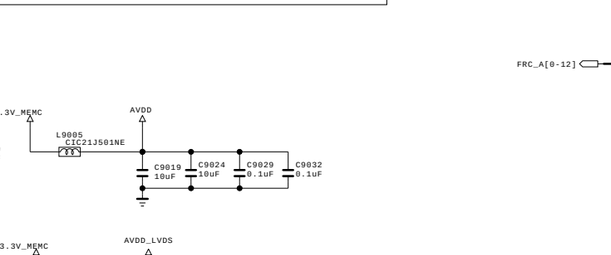

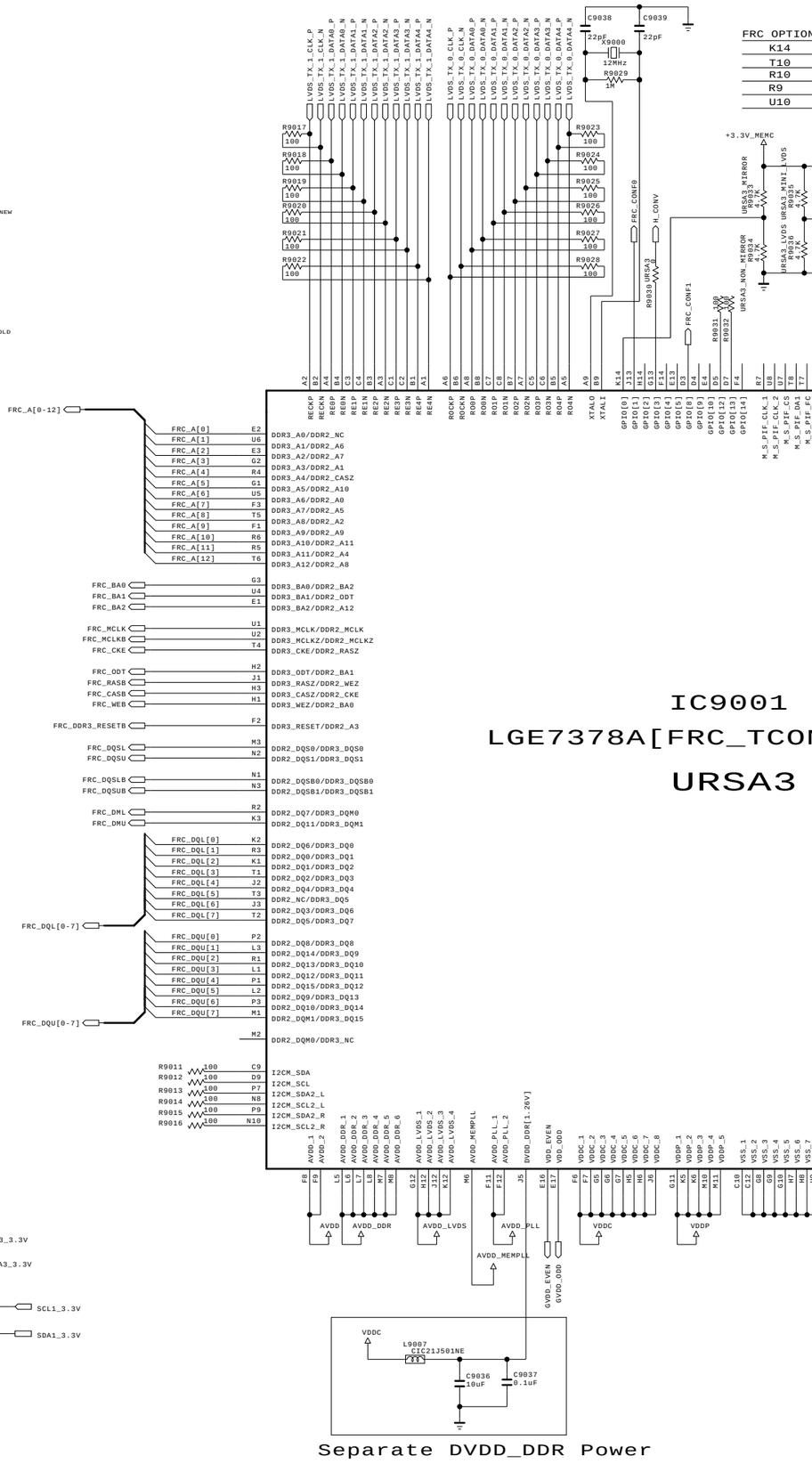

IC9001
LGE7378A[FRC_TCON_URSA3]
URSA3

FRC OPTION	LOW	HIGH
K14	NON_MIRROR	MIRROR
T10	LVDS	MINI_LVDS
R10	GIP	NON_GIP
R9	SCAN_OFF	SCAN_ON
U10	LD	NON_LD

I2C ADR: GPIO1: HI:B8 LOW:B4
CHIP_CONF: {GPIO8, PWM1, PWM0}
CHIP_CONF= 3'd5: boot from internal SRAM
CHIP_CONF= 3'd6: boot from EEPROM
CHIP_CONF= 3'd7: boot from SPI Flash

THE ⚠ SYMBOL MARK OF THIS SCHEMETIC DIAGRAM INCORPORATES SPECIAL FEATURES IMPORTANT FOR PROTECTION FROM X-RADIATION. FILRE AND ELECTRICAL SHOCK HAZARDS, WHEN SERVICING IF IS ESSENTIAL THAT ONLY MANUFATURES SPECFIED PARTS BE USED FOR THE CRITICAL COMPONENTS IN THE ⚠ SYMBOL MARK OF THE SCHEMETIC.

SECRET
LGElectronics

LG ELECTRONICS

MODEL	COMMON	DATE	2009.09.11
BLOCK	URSA3 (NO L.D.)	SHEET	90

Copyright © 2010 LG Electronics. Inc. All rights reserved.
Only for training and service purposes

LGE Internal Use Only

[LEVEL Shift Block]

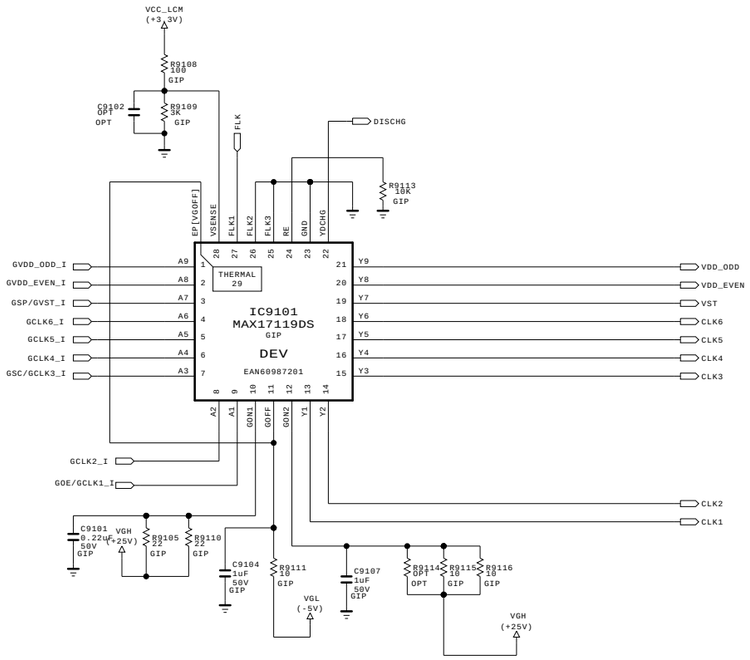

[P-GAMMA Block]

Slave Address : 0xE8h
(A0 Pin - GND)

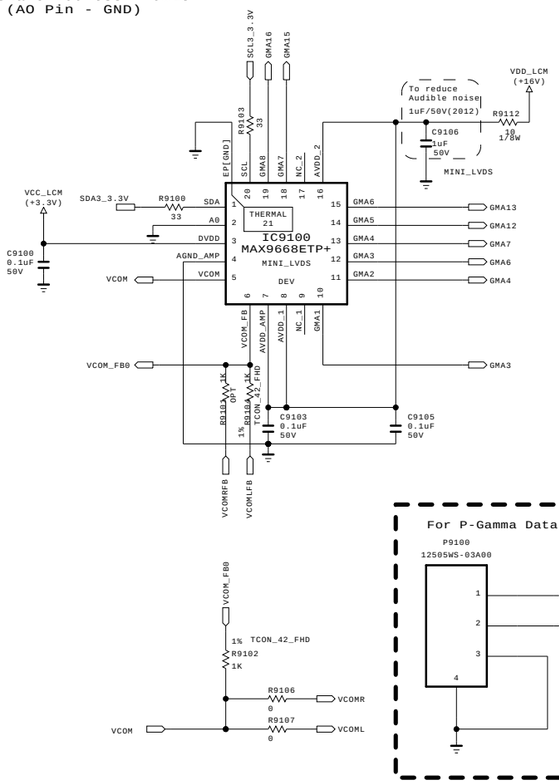

[HVDD Block]

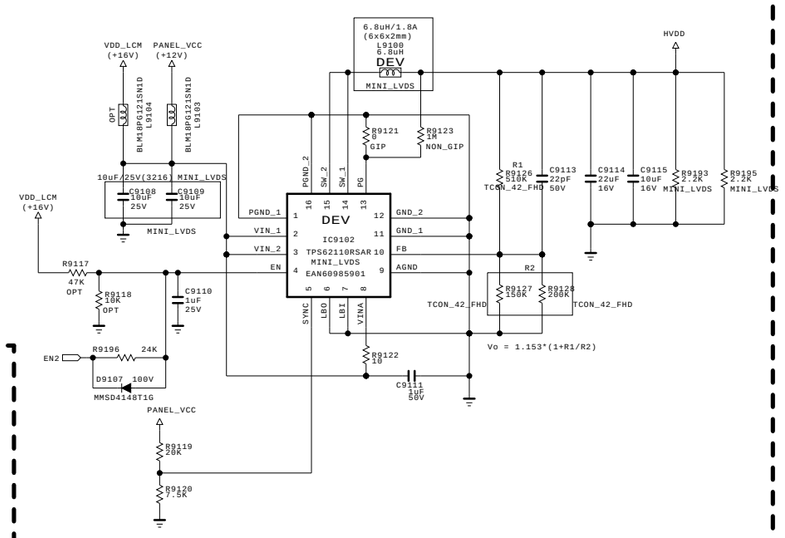

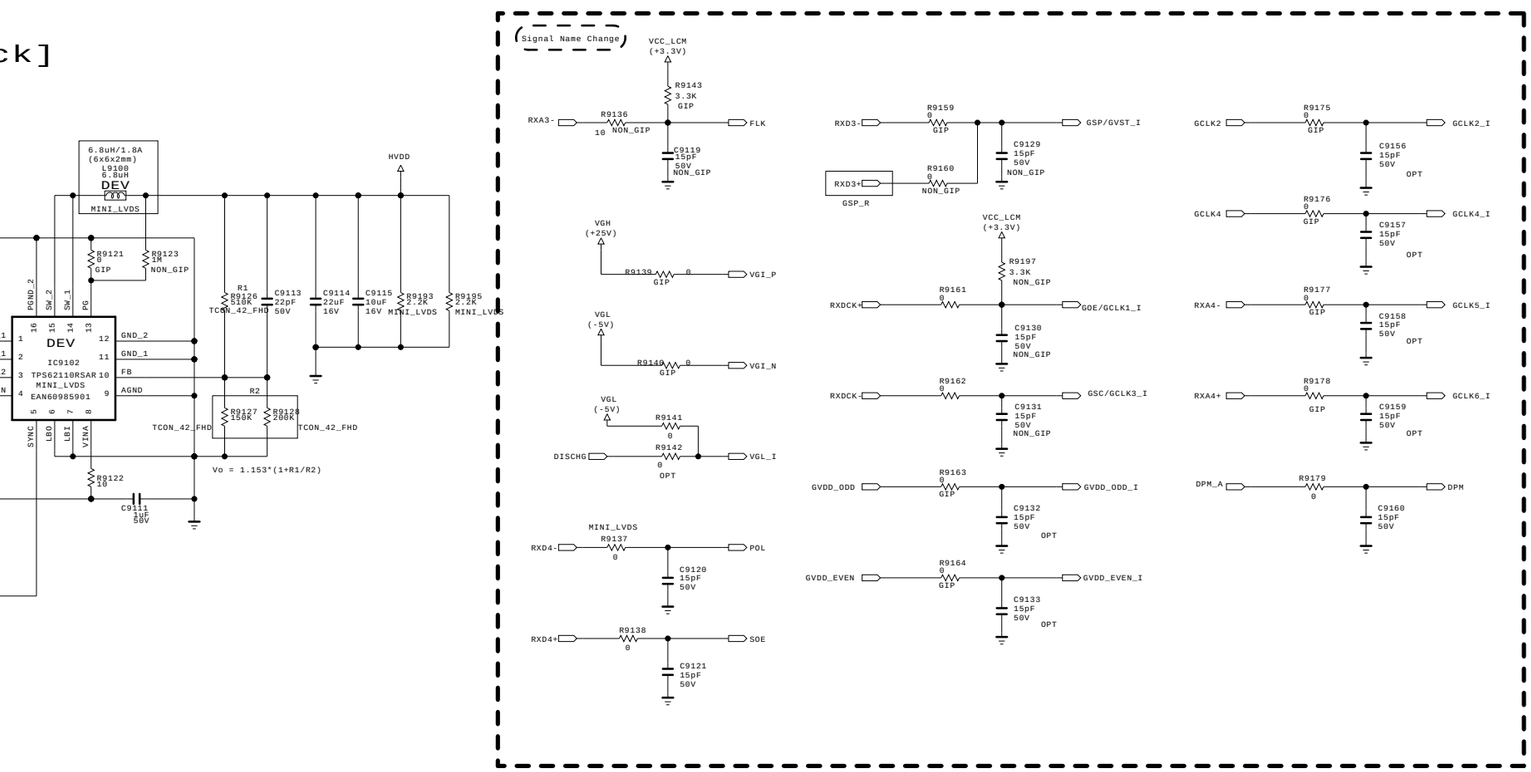

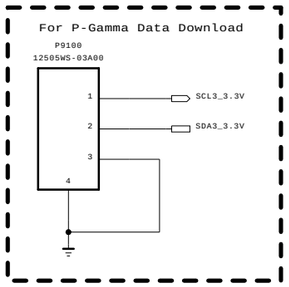

[POWER Block]

* Voltage Target
VDD_LCM = 16.25V
VGH = 28.50V
VGL = -5.35V

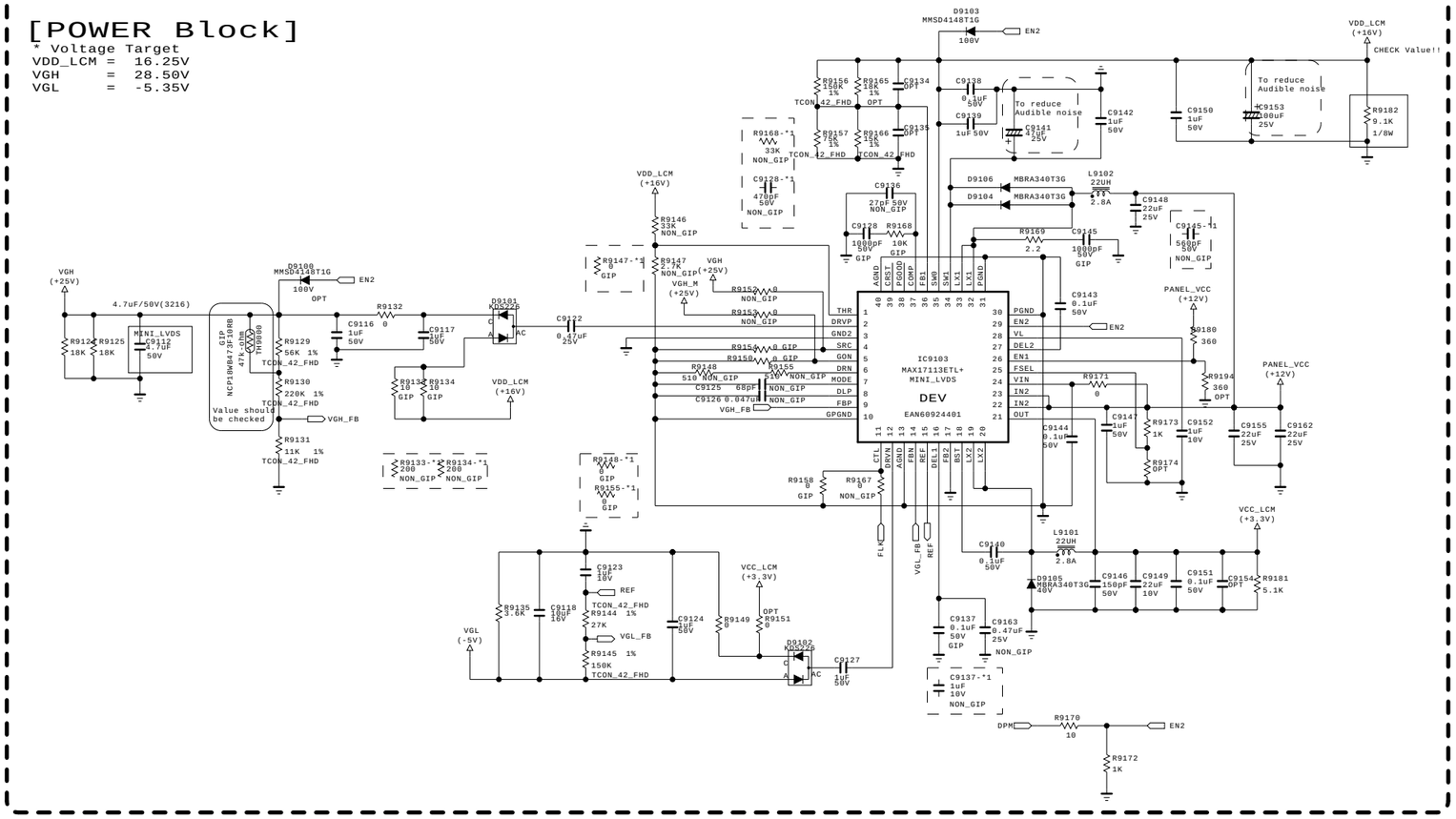

THE ⚠ SYMBOL MARK OF THIS SCHEMETIC DIAGRAM INCORPORATES SPECIAL FEATURES IMPORTANT FOR PROTECTION FROM X-RADIATION. FILRE AND ELECTRICAL SHOCK HAZARDS, WHEN SERVICING IF IS ESSENTIAL THAT ONLY MANUFATURES SPECFIED PARTS BE USED FOR THE CRITICAL COMPONENTS IN THE ⚠ SYMBOL MARK OF THE SCHEMETIC.

SECRET
LGElectronics

LG ELECTRONICS

MODEL	COMMON	DATE	09/09/10
BLOCK	T-Con (NO L.D.)	SHEET	91

Copyright © 2010 LG Electronics. Inc. All rights reserved.
Only for training and service purposes

LGE Internal Use Only

32_FHD

VGH

R9129-*1 22K 1% TCON_32_FHD

R9130-*1 220K 1% TCON_32_FHD

R9131-*1 11K 1% TCON_32_FHD

VGL

R9144-*1 51K 1% TCON_32_FHD

R9145-*1 270K 1% TCON_32_FHD

VDD

R9156-*1 160K 1% TCON_32_FHD

R9165 OPEN

R9157-*1 27K 1% TCON_32_FHD

R9166-*1 24K 1% TCON_32_FHD

HVDD

R9126-*1 510K 1% TCON_32_FHD

R9127-*1 150K 1% TCON_32_FHD

R9128-*1 200K 1% TCON_32_FHD

VCOM FEED BACK

R9101-*1 1K 1% TCON_32_FHD

R9104-*1 1K 1% TCON_32_FHD

R9102-*1 1K 1% TCON_32_FHD

37_FHD

VGH

R9129-*2 47K 1% TCON_37_FHD

R9130-*2 220K 1% TCON_37_FHD

R9131-*2 12K 1% TCON_37_FHD

VGL

R9144-*2 20K 1% TCON_37_FHD

R9145-*2 150K 1% TCON_37_FHD

VDD

R9156-*2 910K 1% TCON_37_FHD

R9165-*2 470K 1% TCON_37_FHD

R9157-*2 56K 1% TCON_37_FHD

R9166-*2 56K 1% TCON_37_FHD

HVDD

R9126-*2 470K 1% TCON_37_FHD

R9128 OPEN

R9127-*2 91K 1% TCON_37_FHD

VCOM FEED BACK

R9101-*2 1K 1% TCON_37_FHD

R9104-*2 1K 1% TCON_37_FHD

R9102-*2 1.5K 5% TCON_37_FHD

42_FHD

VGH

91 or 95 Sheet

VGL

91 or 95 Sheet

VDD

91 or 95 Sheet

HVDD

91 or 95 Sheet

VCOM FEED BACK

91 or 95 Sheet

47_FHD

VGH

R9129-*3 51K 1% TCON_47_FHD

R9130-*3 220K 1% TCON_47_FHD

R9131-*3 11K 1% TCON_47_FHD

VGL

R9144-*3 51K 1% TCON_47_FHD

R9145-*3 270K 1% TCON_47_FHD

VDD

R9156-*3 180K 1% TCON_47_FHD

R9165 OPEN

R9157-*3 15K 1% TCON_47_FHD

R9166-*3 20K 1% TCON_47_FHD

HVDD

R9126-*3 510K 1% TCON_47_FHD

R9127-*3 150K 1% TCON_47_FHD

R9128-*3 220K 1% TCON_47_FHD

VCOM FEED BACK

R9101-*3 1K 1% TCON_47_FHD

R9104-*3 1K 1% TCON_47_FHD

R9102-*3 1K 1% TCON_47_FHD

55_FHD

VGH

R9129-*4 510K 1% TCON_55_FHD

R9130-*4 68K 1% TCON_55_FHD

R9131-*4 27K 1% TCON_55_FHD

VGL

R9144-*4 27K 1% TCON_55_FHD

R9145-*4 150K 1% TCON_55_FHD

VDD

R9156-*4 150K 1% TCON_55_FHD

R9165 OPEN

R9157-*4 75K 1% TCON_55_FHD

R9166-*4 15K 1% TCON_55_FHD

HVDD

R9126-*4 180K 1% TCON_55_FHD

R9127-*4 68K 1% TCON_55_FHD

R9128-*4 56K 1% TCON_55_FHD

VCOM FEED BACK

R9101 OPEN

R9104 OPEN

R9102-*4 0 5% TCON_55_FHD

THE ⚠ SYMBOL MARK OF THIS SCHEMETIC DIAGRAM INCORPORATES SPECIAL FEATURES IMPORTANT FOR PROTECTION FROM X-RADIATION. FILRE AND ELECTRICAL SHOCK HAZARDS, WHEN SERVICING IF IS ESSENTIAL THAT ONLY MANUFATURES SPECFIED PARTS BE USED FOR THE CRITICAL COMPONENTS IN THE ⚠ SYMBOL MARK OF THE SCHEMETIC.

SECRET

LGElectronics

LG ELECTRONICS

MODEL	Common	DATE	09/12/15
BLOCK	T-Con Power Option	SHEET	98

Copyright © 2010 LG Electronics. Inc. All rights reserved.
Only for training and service purposes

LGE Internal Use Only

LG Electronics Inc.