Internal Use Only

North/Latin America http://aic.lgservice.com
Europe/Africa http://eic.lgservice.com
Asia/Oceania http://biz.lgservice.com

LED LCD TV
SERVICE MANUAL

CHASSIS : LD2FF

MODEL : 42LT760H 42LT760H-ZA

CAUTION
BEFORE SERVICING THE CHASSIS,
READ THE SAFETY PRECAUTIONS IN THIS MANUAL.

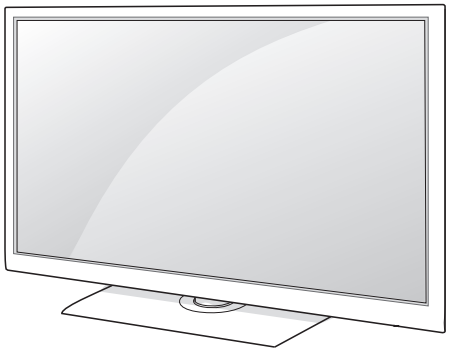

P/NO : MFL67659801 (1209-REV00)

Printed in Korea

CONTENTS

CONTENTS 2

SAFETY PRECAUTIONS 3

SERVICING PRECAUTIONS..... 4

SPECIFICATION 6

ADJUSTMENT INSTRUCTION 9

TROUBLESHOOTING GUIDE.....17

BLOCK DIAGRAM.....26

EXPLODED VIEW 27

SCHEMATIC CIRCUIT DIAGRAM .....

Copyright © 2012 LG Electronics. Inc. All rights reserved.
Only for training and service purposes

LGE Internal Use Only

SAFETY PRECAUTIONS

IMPORTANT SAFETY NOTICE

Many electrical and mechanical parts in this chassis have special safety-related characteristics. These parts are identified by ⚠ in the Schematic Diagram and Exploded View.
It is essential that these special safety parts should be replaced with the same components as recommended in this manual to prevent Shock, Fire, or other Hazards.
Do not modify the original design without permission of manufacturer.

General Guidance

An **isolation Transformer should always be used** during the servicing of a receiver whose chassis is not isolated from the AC power line. Use a transformer of adequate power rating as this protects the technician from accidents resulting in personal injury from electrical shocks.

It will also protect the receiver and it's components from being damaged by accidental shorts of the circuitry that may be inadvertently introduced during the service operation.

If any fuse (or Fusible Resistor) in this TV receiver is blown, replace it with the specified.

When replacing a high wattage resistor (Oxide Metal Film Resistor, over 1 W), keep the resistor 10 mm away from PCB.

Keep wires away from high voltage or high temperature parts.

Before returning the receiver to the customer,

always perform an **AC leakage current check** on the exposed metallic parts of the cabinet, such as antennas, terminals, etc., to be sure the set is safe to operate without damage of electrical shock.

Leakage Current Cold Check(Antenna Cold Check)
With the instrument AC plug removed from AC source, connect an electrical jumper across the two AC plug prongs. Place the AC switch in the on position, connect one lead of ohm-meter to the AC plug prongs tied together and touch other ohm-meter lead in turn to each exposed metallic parts such as antenna terminals, phone jacks, etc.
If the exposed metallic part has a return path to the chassis, the measured resistance should be between 1 MΩ and 5.2 MΩ.
When the exposed metal has no return path to the chassis the reading must be infinite.
An other abnormality exists that must be corrected before the receiver is returned to the customer.

Leakage Current Hot Check (See below Figure)
Plug the AC cord directly into the AC outlet.

Do not use a line Isolation Transformer during this check.
Connect 1.5 K / 10 watt resistor in parallel with a 0.15 uF capacitor between a known good earth ground (Water Pipe, Conduit, etc.) and the exposed metallic parts.
Measure the AC voltage across the resistor using AC voltmeter with 1000 ohms/volt or more sensitivity.
Reverse plug the AC cord into the AC outlet and repeat AC voltage measurements for each exposed metallic part. Any voltage measured must not exceed 0.75 volt RMS which is corresponds to 0.5 mA.
In case any measurement is out of the limits specified, there is possibility of shock hazard and the set must be checked and repaired before it is returned to the customer.

Leakage Current Hot Check circuit

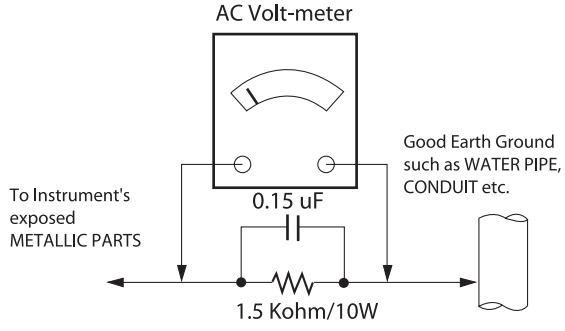

When 25A is impressed between Earth and 2nd Ground for 1 second, Resistance must be less than 0.1 Ω
*Base on Adjustment standard

Copyright © 2012 LG Electronics. Inc. All rights reserved.
Only for training and service purposes

LGE Internal Use Only

SERVICING PRECAUTIONS

CAUTION: Before servicing receivers covered by this service manual and its supplements and addenda, read and follow the *SAFETY PRECAUTIONS* on page 3 of this publication.
NOTE: If unforeseen circumstances create conflict between the following servicing precautions and any of the safety precautions on page 3 of this publication, always follow the safety precautions. Remember: Safety First.

General Servicing Precautions

1. Always unplug the receiver AC power cord from the AC power source before;
   a. Removing or reinstalling any component, circuit board module or any other receiver assembly.
   b. Disconnecting or reconnecting any receiver electrical plug or other electrical connection.
   c. Connecting a test substitute in parallel with an electrolytic capacitor in the receiver.
   CAUTION: A wrong part substitution or incorrect polarity installation of electrolytic capacitors may result in an explosion hazard.
2. Test high voltage only by measuring it with an appropriate high voltage meter or other voltage measuring device (DVM, FETVOM, etc) equipped with a suitable high voltage probe. Do not test high voltage by "drawing an arc".
3. Do not spray chemicals on or near this receiver or any of its assemblies.
4. Unless specified otherwise in this service manual, clean electrical contacts only by applying the following mixture to the contacts with a pipe cleaner, cotton-tipped stick or comparable non-abrasive applicator; 10 % (by volume) Acetone and 90 % (by volume) isopropyl alcohol (90 % - 99 % strength)
   CAUTION: This is a flammable mixture.
   Unless specified otherwise in this service manual, lubrication of contacts in not required.
5. Do not defeat any plug/socket B+ voltage interlocks with which receivers covered by this service manual might be equipped.
6. Do not apply AC power to this instrument and/or any of its electrical assemblies unless all solid-state device heat sinks are correctly installed.
7. Always connect the test receiver ground lead to the receiver chassis ground before connecting the test receiver positive lead.
   Always remove the test receiver ground lead last.
8. Use with this receiver only the test fixtures specified in this service manual.
   CAUTION: Do not connect the test fixture ground strap to any heat sink in this receiver.

Electrostatically Sensitive (ES) Devices

Some semiconductor (solid-state) devices can be damaged easily by static electricity. Such components commonly are called Electrostatically Sensitive (ES) Devices. Examples of typical ES devices are integrated circuits and some field-effect transistors and semiconductor “chip” components. The following techniques should be used to help reduce the incidence of component damage caused by static by static electricity.

1. Immediately before handling any semiconductor component or semiconductor-equipped assembly, drain off any electrostatic charge on your body by touching a known earth ground. Alternatively, obtain and wear a commercially available discharging wrist strap device, which should be removed to prevent potential shock reasons prior to applying power to the unit under test.
2. After removing an electrical assembly equipped with ES devices, place the assembly on a conductive surface such as aluminum foil, to prevent electrostatic charge buildup or exposure of the assembly.
3. Use only a grounded-tip soldering iron to solder or unsolder ES devices.
4. Use only an anti-static type solder removal device. Some solder removal devices not classified as “anti-static” can generate electrical charges sufficient to damage ES devices.
5. Do not use freon-propelled chemicals. These can generate electrical charges sufficient to damage ES devices.
6. Do not remove a replacement ES device from its protective package until immediately before you are ready to install it. (Most replacement ES devices are packaged with leads electrically shorted together by conductive foam, aluminum foil or comparable conductive material).
7. Immediately before removing the protective material from the leads of a replacement ES device, touch the protective material to the chassis or circuit assembly into which the device will be installed.
   CAUTION: Be sure no power is applied to the chassis or circuit, and observe all other safety precautions.
8. Minimize bodily motions when handling unpackaged replacement ES devices. (Otherwise harmless motion such as the brushing together of your clothes fabric or the lifting of your foot from a carpeted floor can generate static electricity sufficient to damage an ES device.)

General Soldering Guidelines

1. Use a grounded-tip, low-wattage soldering iron and appropriate tip size and shape that will maintain tip temperature within the range or 500 °F to 600 °F.
2. Use an appropriate gauge of RMA resin-core solder composed of 60 parts tin/40 parts lead.
3. Keep the soldering iron tip clean and well tinned.
4. Thoroughly clean the surfaces to be soldered. Use a mall wire-bristle (0.5 inch, or 1.25 cm) brush with a metal handle. Do not use freon-propelled spray-on cleaners.
5. Use the following unsoldering technique
   a. Allow the soldering iron tip to reach normal temperature. (500 °F to 600 °F)
   b. Heat the component lead until the solder melts.
   c. Quickly draw the melted solder with an anti-static, suction-type solder removal device or with solder braid.
   CAUTION: Work quickly to avoid overheating the circuit board printed foil.
6. Use the following soldering technique.
   a. Allow the soldering iron tip to reach a normal temperature (500 °F to 600 °F)
   b. First, hold the soldering iron tip and solder the strand against the component lead until the solder melts.
   c. Quickly move the soldering iron tip to the junction of the component lead and the printed circuit foil, and hold it there only until the solder flows onto and around both the component lead and the foil.
   CAUTION: Work quickly to avoid overheating the circuit board printed foil.
   d. Closely inspect the solder area and remove any excess or splashed solder with a small wire-bristle brush.

Copyright © 2012 LG Electronics. Inc. All rights reserved.
Only for training and service purposes

LGE Internal Use Only

IC Remove/Replacement
Some chassis circuit boards have slotted holes (oblong) through which the IC leads are inserted and then bent flat against the circuit foil. When holes are the slotted type, the following technique should be used to remove and replace the IC. When working with boards using the familiar round hole, use the standard technique as outlined in paragraphs 5 and 6 above.

Removal
1. Desolder and straighten each IC lead in one operation by gently prying up on the lead with the soldering iron tip as the solder melts.
2. Draw away the melted solder with an anti-static suction-type solder removal device (or with solder braid) before removing the IC.

Replacement
1. Carefully insert the replacement IC in the circuit board.
2. Carefully bend each IC lead against the circuit foil pad and solder it.
3. Clean the soldered areas with a small wire-bristle brush. (It is not necessary to reapply acrylic coating to the areas).

"Small-Signal" Discrete Transistor Removal/Replacement
1. Remove the defective transistor by clipping its leads as close as possible to the component body.
2. Bend into a "U" shape the end of each of three leads remaining on the circuit board.
3. Bend into a "U" shape the replacement transistor leads.
4. Connect the replacement transistor leads to the corresponding leads extending from the circuit board and crimp the "U" with long nose pliers to insure metal to metal contact then solder each connection.

Power Output, Transistor Device
Removal/Replacement
1. Heat and remove all solder from around the transistor leads.
2. Remove the heat sink mounting screw (if so equipped).
3. Carefully remove the transistor from the heat sink of the circuit board.
4. Insert new transistor in the circuit board.
5. Solder each transistor lead, and clip off excess lead.
6. Replace heat sink.

Diode Removal/Replacement
1. Remove defective diode by clipping its leads as close as possible to diode body.
2. Bend the two remaining leads perpendicular y to the circuit board.
3. Observing diode polarity, wrap each lead of the new diode around the corresponding lead on the circuit board.
4. Securely crimp each connection and solder it.
5. Inspect (on the circuit board copper side) the solder joints of the two "original" leads. If they are not shiny, reheat them and if necessary, apply additional solder.

Fuse and Conventional Resistor
Removal/Replacement
1. Clip each fuse or resistor lead at top of the circuit board hollow stake.
2. Securely crimp the leads of replacement component around notch at stake top.
3. Solder the connections.
   CAUTION: Maintain original spacing between the replaced component and adjacent components and the circuit board to prevent excessive component temperatures.

Circuit Board Foil Repair
Excessive heat applied to the copper foil of any printed circuit board will weaken the adhesive that bonds the foil to the circuit board causing the foil to separate from or "lift-off" the board. The following guidelines and procedures should be followed whenever this condition is encountered.

At IC Connections
To repair a defective copper pattern at IC connections use the following procedure to install a jumper wire on the copper pattern side of the circuit board. (Use this technique only on IC connections).

1. Carefully remove the damaged copper pattern with a sharp knife. (Remove only as much copper as absolutely necessary).
2. carefully scratch away the solder resist and acrylic coating (if used) from the end of the remaining copper pattern.
3. Bend a small "U" in one end of a small gauge jumper wire and carefully crimp it around the IC pin. Solder the IC connection.
4. Route the jumper wire along the path of the out-away copper pattern and let it overlap the previously scraped end of the good copper pattern. Solder the overlapped area and clip off any excess jumper wire.

At Other Connections
Use the following technique to repair the defective copper pattern at connections other than IC Pins. This technique involves the installation of a jumper wire on the component side of the circuit board.

1. Remove the defective copper pattern with a sharp knife. Remove at least 1/4 inch of copper, to ensure that a hazardous condition will not exist if the jumper wire opens.
2. Trace along the copper pattern from both sides of the pattern break and locate the nearest component that is directly connected to the affected copper pattern.
3. Connect insulated 20-gauge jumper wire from the lead of the nearest component on one side of the pattern break to the lead of the nearest component on the other side.
   Carefully crimp and solder the connections.
   CAUTION: Be sure the insulated jumper wire is dressed so the it does not touch components or sharp edges.

Copyright © 2012 LG Electronics. Inc. All rights reserved.
Only for training and service purposes

LGE Internal Use Only

SPECIFICATION

NOTE : Specifications and others are subject to change without notice for improvement.

1. Application range

This specification is applied to the LCD TV used LD23E chassis.

2. Requirement for Test

Each part is tested as below without special appointment.

1) Temperature: 25 °C ± 5 °C(77 °F ± 9 °F), CST: 40 °C ± 5 °C
2) Relative Humidity: 65 % ± 10 %
3) Power Voltage
   : Standard input voltage (AC 100-240 V~, 50/60 Hz)
   * Standard Voltage of each products is marked by models.
4) Specification and performance of each parts are followed each drawing and specification by part number in accordance with BOM.
5) The receiver must be operated for about 20 minutes prior to the adjustment.

3. Test method

1) Performance: LGE TV test method followed
2) Demanded other specification
   - Safety : CE, IEC specification
   - EMC : CE, IEC
   - Wireless : Wireless HD Specification (Option)

4. Model General Specification

No.	Item	Specification	Remarks
1	Market	EU(PAL Market-33Countries)	**DTV & Analog (Total 33 countries)** **DTV (MPEG2/4, DVB-T) : 33 countries** (Albania/Austria/Belarus/Belgium/Bosnia/Bulgaria/Croatia/Czech/Estonia/France/Germany/Greece/Hungary/Ireland/Italy/Kazakhstan/Latvia/Lithuania/Luxembourg/Morocco/Netherlands/Poland/Portugal/Romania/Russia/Serbia/Slovakia/Slovenia/Spain/Switzerland/Turkey/UK/Ukraine) **DTV (MPEG2/4, DVB-C) : 33 countries** (Albania/Austria/Belarus/Belgium/Bosnia/Bulgaria/Croatia/Czech/Estonia/France/Germany/Greece/Hungary/Ireland/Italy/Kazakhstan/Latvia/Lithuania/Luxembourg/Morocco/Netherlands/Poland/Portugal/Romania/Russia/Serbia/Slovakia/Slovenia/Spain/Switzerland/Turkey/UK/Ukraine)
2	Broadcasting system	1) PAL-BG 2) PAL-DK 3) PAL-I/I' 4) SECAM L/L', DK, BG, I	Analogue VHF : E2 to E12, UHF : E21 to E69, CATV : S1 to S20, HYPER : S21 to S47
		5) DVB-T 6) DVB-C	Digital VHF UHF
3	Receiving system	Analog : Upper Heterodyne Digital : COFDM, QAM	► DVB-T - Guard Interval(Bitrate_Mbit/s) 1/4, 1/8, 1/16, 1/32 - Modulation : Code Rate QPSK : 1/2, 2/3, 3/4, 5/6, 7/8 16-QAM : 1/2, 2/3, 3/4, 5/6, 7/8 64-QAM : 1/2, 2/3, 3/4, 5/6, 7/8 ► DVB-C - Symbolrate : 4.0Msymbols/s to 7.2Msymbols/s - Modulation : 16QAM, 64-QAM, 128-QAM and 256-QAM

Copyright © 2012 LG Electronics. Inc. All rights reserved.
Only for training and service purposes

LGE Internal Use Only

No.	Item	Specification	Remarks
4	Scart Input (1EA)	PAL, SECAM	Scart jack is Full scart and support ATV/DTV-Out (not support MNT-Out)
5	RS-232C	SVC, Control, Power outlet (Selectable 12V/1A or 5V/2A)	
6	RGB Input (1EA)	RGB-PC	Analog (D-SUB 15PIN)
7	HDMI Input (3EA)	HDMI1-DTV HDMI2-DTV HDMI3-DTV	HDMI1 : ARC Support(HDMI Version 1.4) Support HDCP
8	Audio Input (1EA)	RGB/DVI Audio	L/R Input
9	SPDIF out (1EA)	SPDIF out	
10	USB (2EA)	EMF, DivX HD, For SVC (download)	JPEG, MP3, DivX HD
11	Ethernet Connect(2EA)	Ethernet Connect	WOL Support
12	CI Slot(1EA)	CI	EU PPV CH. Support
13	Clock LED	Clock LED	Clock Display
14	Ext. Speaker out(1EA)	Ext. Speaker out	Stereo 1W / 8Ω, Variable
	Ext. Volume control(1EA)	Ext. volume control	

5. RGB input (PC)

No.	Resolution	H-freq(kHz)	V-freq.(Hz)	Pixel clock(MHz)	Proposed	Remark
1	720*400	31.468	70.08	28.321		For only DOS mode
2	640*480	31.469	59.94	25.17	VESA	Input 848*480 60Hz, 852*480 60Hz → 640*480 60Hz Display
3	800*600	37.879	60.31	40.00	VESA	
4	1024*768	48.363	60.00	65.00	VESA(XGA)	
5	1360*768	47.72	59.8	84.75	WXGA	
6	1920*1080	66.587	59.93	138.625	WUXGA	FHD model

Copyright © 2012 LG Electronics. Inc. All rights reserved.
Only for training and service purposes

LGE Internal Use Only

6. HDMI Input

6.1. DTV mode

No.	Resolution	H-freq.(kHz)	V-freq.(Hz)	Pixel clock(MHz)	Proposed	Proposed
1.	720*480	31.469 / 31.5	59.94 / 60	27.00/27.03	SDTV 480P	
2.	720*576	31.25	50	54	SDTV 576P	
3.	1280*720	37.500	50	74.25	HDTV 720P	
4.	1280*720	44.96 / 45	59.94 / 60	74.17/74.25	HDTV 720P	
5.	1920*1080	33.72 / 33.75	59.94 / 60	74.17/74.25	HDTV 1080I	
6.	1920*1080	28.125	50.00	74.25	HDTV 1080I	
7.	1920*1080	26.97 / 27	231.97 / 24	74.17/74.25	HDTV 1080P	FHD model
8.	1920*1080	33.716 / 33.75	29.976 / 30.00	74.25	HDTV 1080P	FHD model
9.	1920*1080	56.250	50	148.5	HDTV 1080P	FHD model
10.	1920*1080	67.43 / 67.5	59.94 / 60	148.35/148.50	HDTV 1080P	FHD model

6.2. PC mode

No.	Resolution	H-freq.(kHz)	V-freq.(Hz)	Pixel clock(MHz)	Proposed	Proposed
1.	720*400	31.468	70.08	28.321		HDCP
2.	640*480	31.469	59.94	25.17	VESA	HDCP
3.	800*600	37.879	60.31	40.00	VESA	HDCP
4.	1024*768	48.363	60.00	65.00	VESA(XGA)	HDCP
5.	1360*768	47.72	59.8	84.75	WXGA	HDCP
6.	1280*1024	63.595	60.0	108.875	SXGA	HDCP / FHD model
7.	1920*1080	67.5	60.00	138.625	WUXGA	HDCP / FHD model

Copyright © 2012 LG Electronics. Inc. All rights reserved.
Only for training and service purposes

LGE Internal Use Only

ADJUSTMENT INSTRUCTION

1. Application Range

This spec. sheet applies to LD2FF Chassis applied LCD TV all models manufactured in TV factory.

2. Designation

(1) Because this is not a hot chassis, it is not necessary to use an isolation transformer. However, the use of isolation transformer will help protect test instrument.
(2) Adjustment must be done in the correct order.
(3) The adjustment must be performed in the circumstance of 25 °C ± 5 °C of temperature and 65 % ± 10 % of relative humidity if there is no specific designation.
(4) The input voltage of the receiver must keep AC 100-240 V~, 50/60 Hz.
(5) The receiver must be operated for about 5 minutes prior to the adjustment when module is in the circumstance of over 15.

In case of keeping module is in the circumstance of 0 °C, it should be placed in the circumstance of above 15 °C for 2 hours.

In case of keeping module is in the circumstance of below -20 °C, it should be placed in the circumstance of above 15 °C for 3 hours.

[Caution]
When still image is displayed for a period of 20 minutes or longer (Especially where W/B scale is strong. Digital pattern 13ch and/or Cross hatch pattern 09ch), there can some afterimage in the black level area.

3. MAIN PCBA Adjustments

3.1. ADC Calibration

3.1.1. Overview

ADC adjustment is needed to find the optimum black level and gain in Analog-to-Digital device and to compensate RGB deviation.

3.1.2. Equipment & Condition

(1) USB to RS-232C Jig
(2) MSPG-925 Series Pattern Generator (MSPG-925FA, pattern - 65)
- Resolution : 1080P Comp1
  1920*1080 RGB
- Pattern : Horizontal 100% Color Bar Pattern
- Pattern level : 0.7 ± 0.1 Vp-p
- Image

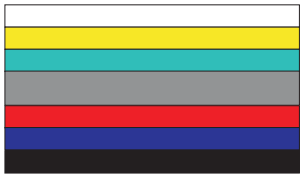

3.1.3. Adjustment method

(1) Adjustment method
- Don't need to adjust ADC because there is data in OTP and adjusted initially.

3.2. MAC address D/L, CI+ D/L

3.2.1. Equipment & Condition

1) Play file: keydownload.exe

3.2.2. Communication Port connection

1) Key Write: Com 1,2,3,4 and 115200 (Baudrate)
2) Barcode: Com 1,2,3,4 and 9600 (Baudrate)

3.2.3. Download process

1) Select the download items.
2) Mode check: Online Only
3) Check the test process
   - DETECT -> MAC -> CI+
4) Play: START
5) Check of result: Ready, Test, OK or NG
6) Printer Out (MAC Address Label)

3.2.4. Communication Port connection

Connect: PCBA Jig → RS-232C Port== PC → RS-232C Port

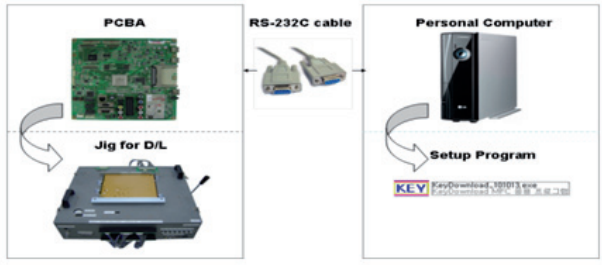

3.2.5. Download

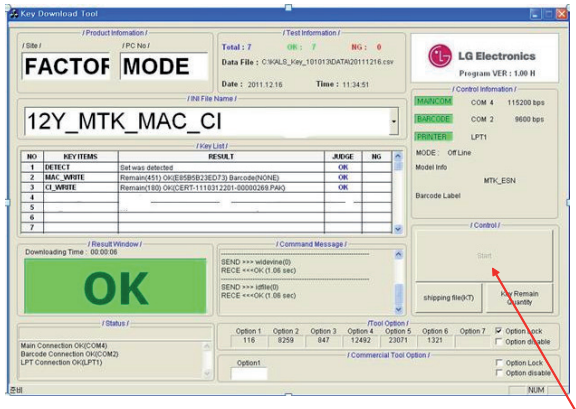

3.2.6. Inspection

- In INSTART menu, check these keys.

Copyright © 2012 LG Electronics. Inc. All rights reserved.
Only for training and service purposes

LGE Internal Use Only

3.3. LAN Inspection

3.3.1. Equipment & Condition

▪ Each other connection to LAN Port of IP Hub and Jig

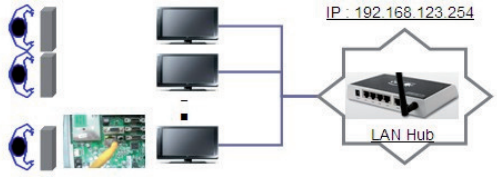

3.3.2. LAN inspection solution

▪ LAN Port connection with PCB

▪ Network setting at MENU Mode of TV(Instart -> menu -> Network Setup)

▪ Setting automatic IP

▪ Setting state confirmation

→ If automatic setting is finished, you confirm IP and MAC Address.

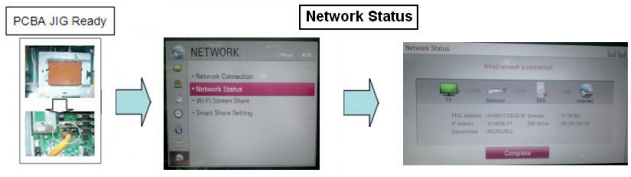

3.4. LAN PORT INSPECTION(PING TEST)

3.4.1. Equipment setting

(1) Play the LAN Port Test PROGRAM.

(2) Input IP set up for an inspection to Test Program.

*IP Number : 12.12.2.2

Connect SET → LAN port == PC → LAN Port

SET —— PC

3.4.2. LAN PORT inspection(PING TEST)

(1) Play the LAN Port Test Program.

(2) Connect each other LAN Port Jack.

(3) Play Test (F9) button and confirm OK Message.

(4) Remove LAN cable.

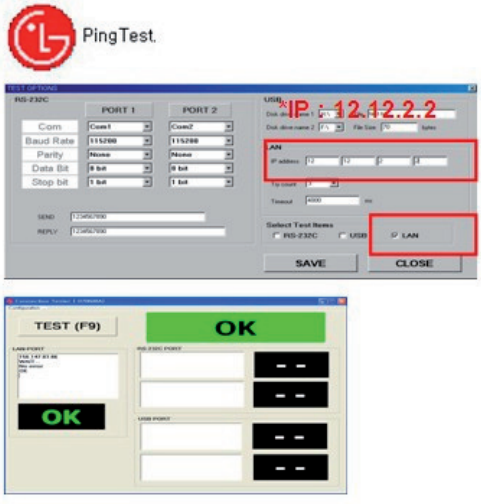

3.5. Model name & Serial number Download

3.5.1. Model name & Serial number D/L

- Press "Power on" key of service remote control. (Baud rate : 115200 bps)
- Connect RS232 Signal Cable to RS-232 Jack.
- Write Serial number by use RS-232.
- Must check the serial number at Instart menu.

3.5.2. Method & notice

(1) Serial number D/L is using of scan equipment.

(2) Setting of scan equipment operated by Manufacturing Technology Group.

(3) Serial number D/L must be conformed when it is produced in production line, because serial number D/L is mandatory by D-book 4.0.

* Manual Download (Model Name and Serial Number)

If the TV set is downloaded by OTA or service man, sometimes model name or serial number is initialized.(Not always)

It is impossible to download by bar code scan, so It need Manual download.

1) Press the "Instart" key of Adjustment remote control.

2) Go to the menu "7.Model Number D/L" like below photo.

3) Input the Factory model name(ex 42LT760H-ZA) or Serial number like photo.

4) Check the model name Instart menu. → Factory name displayed. (ex 42LT760H-ZA)

5) Check the Diagnostics.(DTV country only) → Buyer model displayed. (ex 42LT760H-ZA)

3.6. CI+ Key checking method

- Check the Section 3.2

Check whether the key was downloaded or not at 'In Start' menu. (Refer to below).

=> Check the Download to CI+ Key value in LGset.

Copyright © 2012 LG Electronics. Inc. All rights reserved.
Only for training and service purposes

LGE Internal Use Only

3.6.1. Check the method of CI+ Key value

(1) Check the method on Instart menu

(2) Check the method of RS232C Command

1) Into the main ass'y mode(RS232: aa 00 00)

CMD 1	CMD 2	Data 0	
A	A	0	0

2) Check the key download for transmitted command (RS232: ci 00 10)

CMD 1	CMD 2	Data 0	
C	I	1	0

3) Result value

- Normally status for download : OKx
- Abnormally status for download : NGx

3.6.2. Check the method of CI+ key value(RS232)

1) Into the main ass'y mode(RS232: aa 00 00)

CMD 1	CMD 2	Data 0	
A	A	0	0

2) Check the mothed of CI+ key by command (RS232: ci 00 20)

CMD 1	CMD 2	Data 0	
C	I	2	0

3) Result value

i 01 OK 1d1852d21c1ed5dcx

→ CI+ Key Value

3.7. WIFI MAC ADDRESS CHECK

(1) Using RS232 Command

	H-freq(kHz)	V-freq.(Hz)
Transmission	[A][I][][Set ID][][20][Cr]	[O][K][X] or [NG]

(2) Check the menu on in-start

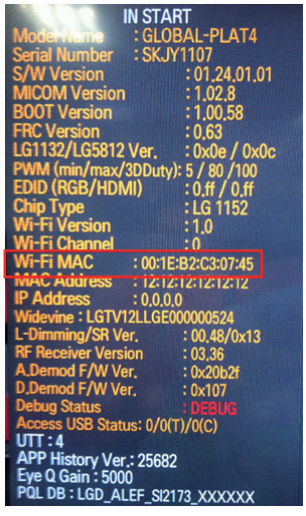

4. Manual Adjustment

* ADC adjustment is not needed because of OTP(Auto ADC adjustment)

4.1. EDID(The Extended Display Identification Data)/DDC(Display Data Channel) download

4.1.1. Overview

It is a VESA regulation. A PC or a MNT will display an optimal resolution through information sharing without any necessity of user input. It is a realization of "Plug and Play".

4.1.2. Equipment

- Since embedded EDID data is used, EDID download JIG, HDMI cable and D-sub cable are not need.
- Adjustment remote control

4.1.3. Download method

(1) Press "ADJ" key on the Adjustment remote control then select "12.EDID D/L", By pressing "Enter" key, enter EDID D/L menu.

(2) Select "Start" button by pressing "Enter" key, HDMI1/ HDMI2/ HDMI3/ HDMI4/ RGB are writing and display OK or NG.

For Analog	For HDMI EDID	
D-sub to D-sub	DVI-D to HDMI or HDMI to HDMI	

4.1.4. EDID DATA

▪ HDMI_EDID DATA_2D

	0x00	0x01	0x02	0x03	0x04	0x05	0x06	0x07	0x08	0x09	0x0A	0x0B	0x0C	0x0D	0x0E	0x0F
0x00	00	FF	FF	FF	FF	FF	FF	00	1E	6D	ⓐⓓ		ⓑ			
0x01	ⓒ		01	03	80	A0	5A	78	0A	EE	91	A3	54	4C	99	26
0x02	0F	50	54	A1	08	00	31	40	45	40	61	40	71	40	81	80
0x03	01	01	01	01	01	01	02	3A	80	18	71	38	2D	40	58	2C
0x04	45	00	A0	5A	00	00	00	1E	66	21	50	B0	51	00	1B	30
0x05	40	70	36	00	A0	5A	00	00	00	1E	00	00	00	FD	00	3A
0x06	3E	1F	53	10	00	0A	20	20	20	20	20	20	ⓓ			
0x07	ⓓ														01	ⓔ1
0x00	02	03	26	F1	4E	10	9F	04	13	05	14	03	02	12	20	21
0x01	22	15	01	26	15	07	50	09	57	07	ⓕ					
0x02	ⓕ		E3	05	00	00	00	1D	80	18	71	1C	16	20	58	2C
0x03	25	00	A0	5A	00	00	00	9E	01	1D	00	80	51	D0	1A	20
0x04	6E	88	55	00	A0	5A	00	00	00	1A	02	3A	80	18	71	38
0x05	2D	40	58	2C	45	00	A0	5A	00	00	00	1E	66	21	50	B0
0x06	51	00	1B	30	40	70	36	00	A0	5A	00	00	00	1E	00	00
0x07	00	00	00	00	00	00	00	00	00	00	00	00	00	00	00	ⓔ2

▪ RGB_EDID

	0x00	0x01	0x02	0x03	0x04	0x05	0x06	0x07	0x08	0x09	0x0A	0x0B	0x0C	0x0D	0x0E	0x0F
0x00	00	FF	FF	FF	FF	FF	FF	00	1E	6D	ⓐ		ⓑ			
0x01	ⓒ		01	03	68	A0	5A	78	0A	EE	91	A3	54	4C	99	26
0x02	0F	50	54	A1	08	00	31	40	45	40	61	40	71	40	81	80
0x03	01	01	01	01	01	01	02	3A	80	18	71	38	2D	40	58	2C
0x04	45	00	A0	5A	00	00	00	1E	66	21	50	B0	51	00	1B	30
0x05	40	70	36	00	A0	5A	00	00	00	1E	00	00	00	FD	00	3A
0x06	3E	1E	53	10	00	0A	20	20	20	20	20	20	ⓓ			
0x07	ⓓ														00	ⓔ3

Copyright © 2012 LG Electronics. Inc. All rights reserved.
Only for training and service purposes

LGE Internal Use Only

▪ Reference
- HDMI1 ~ HDMI3 / RGB
- In the data of EDID, bellows may be different by S/W or Input mode.

ⓐ Product ID

HEX	EDID Table	DDC Function
0001	01 00	Analog
0001	01 00	Digital

ⓑ Serial No: Controlled on production line.
ⓒ Month, Year: Controlled on production line:
ex) Monthly : '01' → '01'
Year : '2012' → '16'
ⓓ Model Name(Hex): LGTV

MODEL NAME	MODEL NAME(HEX)
LG TV	00 00 00 FC 00 4C 47 20 54 56 0A 20 20 20 20 20 20 20 (LG TV)

ⓔ Checksum(LG TV): Changeable by total EDID data.

	ⓔ1	ⓔ2	ⓔ3
HDMI1	43	15	X
HDMI2	43	5	X
HDMI3	43	F5	X
RGB	X	X	5C

ⓕ Vendor Specific(HDMI)

Input	Model name(HEX)
HDMI1	67 03 0C 00 10 00 80 2D
HDMI2	67 03 0C 00 20 00 80 2D
HDMI3	67 03 0C 00 30 00 80 2D

4.2. White Balance Adjustment

4.2.1. Overview

▪ W/B adj. Objective & How-it-works
(1) Objective: To reduce each Panel's W/B deviation
(2) How-it-works : When R/G/B gain in the OSD is at 192, it means the panel is at its Full Dynamic Range. In order to prevent saturation of Full Dynamic range and data, one of R/G/B is fixed at 192, and the other two is lowered to find the desired value.
(3) Adjustment condition : normal temperature
1) Surrounding Temperature : 25 °C ± 5 °C
2) Warm-up time: About 5 Min
3) Surrounding Humidity : 20 % ~ 80 %

4.2.2. Equipment

(1) Color Analyzer: CA-210 (LED Module : CH 14)
(2) Adjustment Computer(During auto adj., RS-232C protocol is needed)
(3) Adjustment Remote control
(4) Video Signal Generator MSPG-925F 720p/216-Gray (Model: 217, Pattern: 78)
→ Only when internal pattern is not available
▪ Color Analyzer Matrix should be calibrated using CS-1000.

4.2.3. Equipment connection MAP

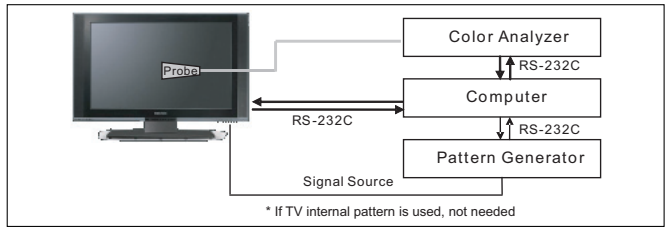

4.2.4. Adj. Command (Protocol)

<Command Format>

START	6E	A	50	A	LEN	A	03	A	CMD	A	00	A	VAL	A	CS	STOP

- LEN: Number of Data Byte to be sent
- CMD: Command
- VAL: FOS Data value
- CS: Checksum of sent data
- A: Acknowledge
Ex) [Send: JA_00_DD] / [Ack: A_00_okDDX]

▪ RS-232C Command used during auto-adjustment.

RS-232C COMMAND [CMD	ID	DATA]	Explantion
wb	00	00	Begin White Balance adjustment
wb	00	10	Gain adjustment(internal white pattern)
wb	00	1f	Gain adjustment completed
wb	00	20	Offset adjustment(internal white pattern)
wb	00	2f	Offset adjustment completed
wb	00	ff	End White Balance adjustment (internal pattern disappears)

Ex) wb 00 00 -> Begin white balance auto-adj.
wb 00 10 -> Gain adj.
ja 00 ff -> Adj. data
jb 00 c0
...
...
wb 00 1f → Gain adj. completed
*(wb 00 20(Start), wb 00 2f(end)) → Off-set adj.
wb 00 ff → End white balance auto-adj.

Copyright © 2012 LG Electronics. Inc. All rights reserved.
Only for training and service purposes

LGE Internal Use Only

▪ Adj. Map

	Adj. item	Command (lower caseASCII)		Data Range (Hex.)		Default (Decimal)
		CMD1	CMD2	MIN	MAX	
Cool	R Gain	j	g	00	C0	
	G Gain	j	h	00	C0	
	B Gain	j	i	00	C0	
	R Cut					
	G Cut					
	B Cut					
Medium	R Gain	j	a	00	C0	
	G Gain	j	b	00	C0	
	B Gain	j	c	00	C0	
	R Cut					
	G Cut					
	B Cut					
Warm	R Gain	j	d	00	C0	
	G Gain	j	e	00	C0	
	B Gain	j	f	00	C0	
	R Cut					
	G Cut					

4.2.5. Adjustment method

(1) Auto WB calibration

1) Set TV in ADJ mode using P-ONLY key(or POWER ON key)
2) Place optical probe on the center of the display
   - It need to check probe condition of zero calibration before adjustment.
3) Connect RS-232C Cable.
4) Select mode in ADJ Program and begin a adjustment.
5) When WB adjustment is complete with OK message, adjustment status of pre-set mode(Cool, Medium, Warm)
6) Remove probe and RS-232C cable

▪ *W/B Adj. must begin as start command "wb 00 00" , and finish as end command "wb 00 ff", and Adj. offset if need.*

4.2.6. Reference (White balance Adj. coordinate and color temperature)

▪ Luminance : 204 Gray, 80IRE

▪ Standard color coordinate and temperature using CS-1000 (over 26 inch)

Mode	Coordinate		Temp	∆uv
	x	y		
Cool	0.269	0.273	13000 K	0.0000
Medium	0.285	0.293	9300 K	0.0000
Warm	0.313	0.329	6500 K	0.0000

▪ Standard color coordinate and temperature using CA-210(CH 14)

(1) LGD

Mode	Coordinate		Temp	∆uv
	x	y		
Cool	0.269 ± 0.002	0.273 ± 0.002	13,000 K	0.0000
Medium	0.285 ± 0.002	0.293 ± 0.002	9,300 K	0.0000
Warm	0.313 ± 0.002	0.329 ± 0.002	6,500K	0.0000

(2) O/S Module(AUO, CMI, Sharp,IPS…)

Mode	Coordinate		Temp	∆uv
	x	y		
Cool	0.271 ± 0.002	0.276 ± 0.002	13,000 K	0.0000
Medium	0.287 ± 0.002	0.296 ± 0.002	9,300 K	0.0000
Warm	0.315 ± 0.002	0.332 ± 0.002	6,500 K	0.0000

▪ Standard color coordinate and temperature using CA-210 (CH 14) - by aging time

1) Edge LED models (applied only LGD Module) in LGERS

GP2	Aging time (Min)	Cool		Medium		Warm	
		X	y	x	y	x	y
		269	273	285	293	313	329
1	0-2	279	288	295	308	319	338
2	3-5	278	286	294	306	318	336
3	6-9	277	285	293	305	317	335
4	10-19	276	283	292	303	316	333
5	20-35	274	280	290	300	314	330
6	36-49	272	277	288	297	312	327
7	50-79	271	275	287	295	311	325
8	80-149	270	274	286	294	310	324
9	Over 150	269	273	285	293	309	323

2) Edge LED models (applied only LGD Module) in LGEKR (GUMI) (wintertime)

GP2	Aging time (Min)	Cool		Medium		Warm	
		X	y	x	y	x	y
		269	273	285	293	313	329
1	281	293	297	313	321	343	338
2	280	290	296	310	320	340	336
3	279	289	295	309	319	339	335
4	277	286	293	306	317	333	333
5	275	282	291	302	315	332	330
6	273	278	289	298	313	328	327
7	271	276	287	296	311	326	325
8	270	274	286	294	310	324	324
9	269	273	285	293	309	323	323

4.3. Tool Option selection

▪ Method : Press "ADJ" key on the Adjustment remote control, then select Tool option.

Copyright © 2012 LG Electronics. Inc. All rights reserved.
Only for training and service purposes

LGE Internal Use Only

4.4. Wi-Fi Test

Step 1) Turn on TV

Step 2) Select Network Connection option in Network Menu.
Instart menu -> Menu -> Network Setup

Step 3) Select Start Connection button in Network Connection.

Step 4) If the system finds any AP like blow PIC, it is working well.

4.5. HDMI ARC Function Inspection

4.5.1. Test equipment

- Optic Receiver Speaker
- MSHG-600 (SW: 1220 ↑)
- HDMI Cable (for 1.4 version)

4.5.2. Test method

(1) Insert the HDMI Cable to the HDMI ARC port from the master equipment (HDMI1)

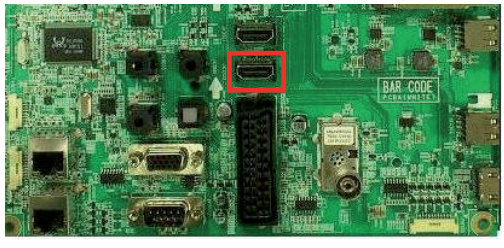

(2) Check the sound from the TV Set

(3) Check the Sound from the Speaker or using AV & Optic TEST program (It's connected to MSHG-600)

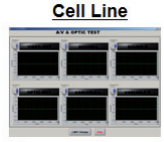

* Remark: Inspect in Power Only Mode and check SW version in a master equipment

5. Check Commercial features

Mode info.		Commercial Feature				
Name	inch	IR Out	DC Power Out(12V)	Ext SPK Out	RJP (HDMI interface)	Pro:Idiom
LT760H-ZA	32/37/42/47	O	O	O	O	O

5.1. External SPK Out

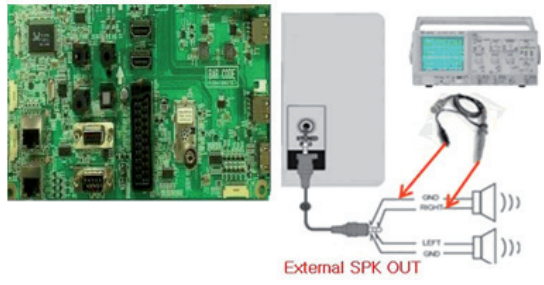

5.1.1. Equipment & Condition

- Jig (Speaker out JIG) or Oscilloscope
- Power only mode

5.1.2. Check the speaker out

1) Connect the External Speaker : check the sound
Connect oscilloscope, you can see this waveform.

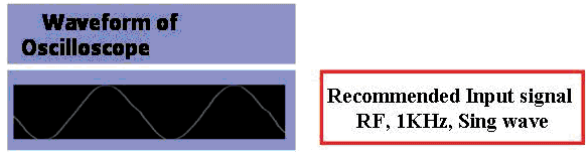

Copyright © 2012 LG Electronics. Inc. All rights reserved.
Only for training and service purposes

LGE Internal Use Only

5.2. IR Out and DC Power Outlet (12V)

(1) Equipment & Condition
- Jig (commercial check JIG)
- Special 232C Cable for commercial check Jig
- Power only mode
- PCB mode (instart menu -> menu -> Configuration Setup -> RS232 DC Power Outlet)

(2) Check the power out & IR out - commercial check jig
1) Connect each other RS232c port on the Commercial Check JIG
2) Press RED Color Button on SVC Remote-control in power only mode (or PCB mode)
3) Check the LED of jig board
- +12V LED (OK condition: Turn On)
- IR LED (OK condition: blinking)

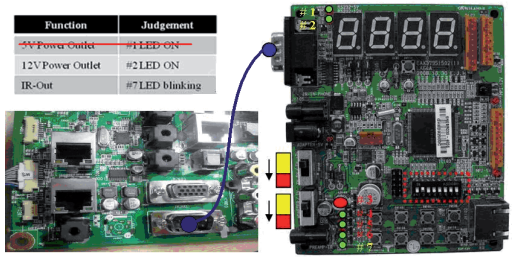

(3) Check the power out & IR out – mini jig
1) Connect mini jig on RS232c port
2) Press RED Color Button on SVC Remote-control in power only mode (or PCB mode)
3) Check the LED of mini jig

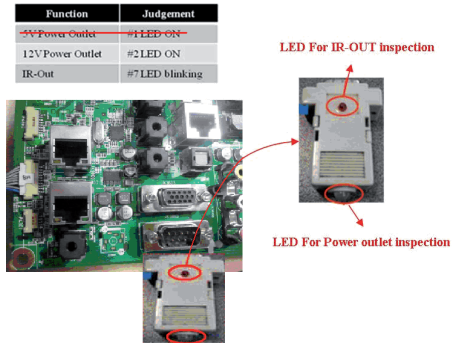

(4) Pro:Idiom Check
1) Connect the RF Cable
2) Turn to the Pro:Idiom channel (No. 333)
3) Check the video & sound
** Only displayed at “POWER ONLY” mode

6. AUDIO output check

6.1. Audio input condition

1) RF input: Mono, 1 KHz sine wave signal, 100 % Modulation
2) CVBS, Component: 1 KHz sine wave signal 0.5 Vrms
3) RGB PC: 1 KHz sine wave signal 0.7 Vrms

6.2. Specification

Item	Min	Typ	Max	Unit	Remark
Au dio practical max Output, L/R (Distortion=10% max Output)	9.0 8.5	10.0 8.9	12.0 9.9	W Vrms	(1) Measurement condition - EQ/AVL/Clear Voice: Off (2) Speaker (8Ω Impedance)

7. GND and HI-POT Test

7.1. GND & HI-POT auto-check preparation

(1) Check the POWER CABLE and SIGNAL CABE insertion condition

7.2. GND & HI-POT auto-check

(1) Pallet moves in the station. (POWER CORD / AV CORD is tightly inserted)
(2) Connect the AV JACK Tester.
(3) Controller (GWS103-4) on.
(4) GND Test (Auto)
- If Test is failed, Buzzer operates.
- If Test is passed, execute next process (Hi-pot test). (Remove A/V CORD from A/V JACK BOX)

(5) HI-POT test (Auto)
- If Test is failed, Buzzer operates.
- If Test is passed, GOOD Lamp on and move to next process automatically.

7.3. Checkpoint

(1) Test voltage
- GND: 1.5KV/min at 100mA
- SIGNAL: 3KV/min at 100mA

(2) TEST time: 1 second
(3) TEST POINT
- GND Test = POWER CORD GND and SIGNAL CABLE GND.
- Hi-pot Test = POWER CORD GND and LIVE & NEUTRAL.

(4) LEAKAGE CURRENT: At 0.5 mArms

Copyright © 2012 LG Electronics. Inc. All rights reserved.
Only for training and service purposes

LGE Internal Use Only

8. USB S/W Download(Service only)

(1) Put the USB Stick to the USB socket.
(2) Automatically detecting update file in USB Stick.
- If your downloaded program version in USB Stick is Low, it didn't work. But your downloaded version is High, USB data is automatically detecting.(Download Version High & Power only mode, Set is automatically Download)

(3) Show the message "Copying files from memory".

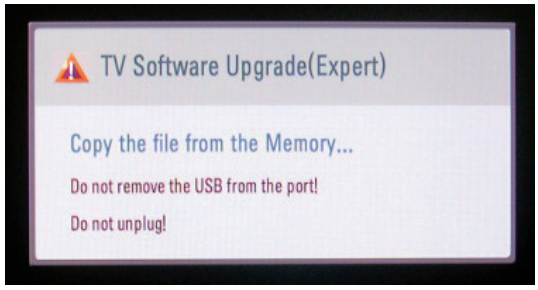

(4) Updating is starting.

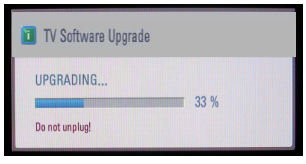

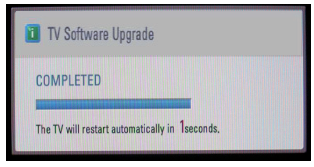

(5) Updating Completed, The TV will restart automatically.
(6) If your TV is turned on, check your updated version and Tool option. (explain the Tool option, next stage)

* If downloading version is more high than your TV have, TV can lost all channel data. In this case, you have to channel recover. if all channel data is cleared, you didn't have a DTV/ ATV test on production line.

* After downloading, have to adjust Tool Option again.
(1) Push "IN-START" key in service remote control.
(2) Select "Tool Option 1" and push "OK" key.
(3) Punch in the number. (Each model has their number)

9. Optional adjustments

9.1. Manual ADC Calibration

9.1.1. Equipment & Condition

(1) Adjustment Remote control
(2) 801GF(802B, 802F, 802R) or MSPG925FA Pattern Generator
- Resolution: 480i Comp1(MSPG-925FA: model-209, pattern-65)
- Resolution: 1080p Comp1(MSPG-925FA: model-225, pattern-65)
- Resolution : 1080p RGB (MSPG-925FA: model-225, pattern-65)
- Pattern : Horizontal 100% Color Bar Pattern
- Pattern level: 0.7±0.1 Vp-p

9.1.2 Adjust method

(1) ADC 480i/1080p Comp1, RGB
1) Check connected condition of Comp1/RGB cable to the equipment
2) Give a 480i Mode, Horizontal 100% Color Bar Pattern to Comp1. (MSPG-925FA → Model: 209, Pattern: 65)
3) Change input mode as Component1 and picture mode as "Standard"
4) Press the In-start Key on the ADJ remote after at least 1 min of signal reception. Then, select 7.External ADC. And Press OK or Right Button for going to sub menu.
5) Press OK in Comp 480i menu
6) Give a 1080p Mode, Horizontal 100% Color Bar Pattern to Comp1. (MSPG-925FA → Model: 225, Pattern: 65)
7) Press OK in Comp 1080p menu
8) Perform (6) and (7) in RGB-PC
9) If ADC Comp is successful, "ADC Component Success" is displayed. If ADC calibration is failure, "ADC Component Fail" is displayed.
10) If ADC calibration is failure, after rechecking ADC pattern or condition, retry calibration
11) If ADC RGB calibration is successful, "ADC RGB Success" is displayed. If ADC calibration is failure, "ADC RGB Fail" is displayed.
12) If ADC calibration is failure, after recheck ADC pattern or condition, retry calibration

9.2. Manual White balance Adjustment

9.2.1. Adj. condition and cautionary items

(1) Lighting condition in surrounding area surrounding lighting should be lower 10 lux. Try to isolate adj. area into dark surrounding.
(2) Probe location: Color Analyzer (CA-210) probe should be within 10 cm and perpendicular of the module surface (80 °~ 100 °)
(3) Aging time
1) After Aging Start, Keep the Power ON status during 5 Minutes.
2) In case of LCD, Back-light on should be checked using no signal or Full-white pattern.

9.2.2. Equipment

(1) Color Analyzer: CA-210(NCG: CH 9/ WCG: CH12/ LED: CH14)
(2) Adj. Computer(During auto adj., RS-232C protocol is needed)
(3) Adjust Remote control
(4) Video Signal Generator MSPG-925F 720p/216-Gray (Model: 217, Pattern: 78)

9.2.3. Adjustment

(1) Set TV in Adj. mode using POWER ON
(2) Zero Calibrate the probe of Color Analyzer, then place it on the center of LCD module within 10cm of the surface.
(3) Press ADJ key → EZ adjust using adj. R/C → 6. White-Balance then press the cursor to the right (Key ►). When Key(►) is pressed 216 Gray internal pattern will be displayed.
(4) One of R Gain / G Gain / B Gain should be fixed at 192, and the rest will be lowered to meet the desired value.
(5) Adj. is performed in COOL, MEDIUM, WARM 3 modes of color temperature.

▪ If internal pattern is not available, use RF input. In EZ Adj. menu 6.White Balance, you can select one of 2 Test-pattern: ON, OFF. Default is inner(ON). By selecting OFF,

Copyright © 2012 LG Electronics. Inc. All rights reserved.
Only for training and service purposes

LGE Internal Use Only

TROUBLESHOOTING GUIDE

1. Power-Up Boot Fail Trouble Shooting guide

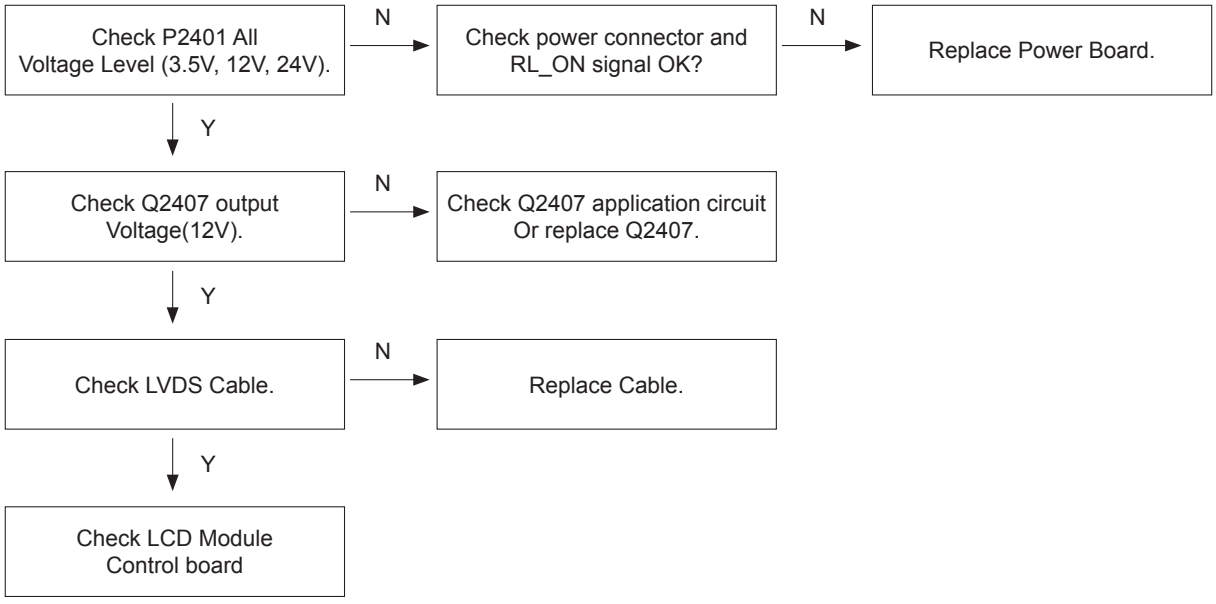

2. No OSD Trouble Shooting guide

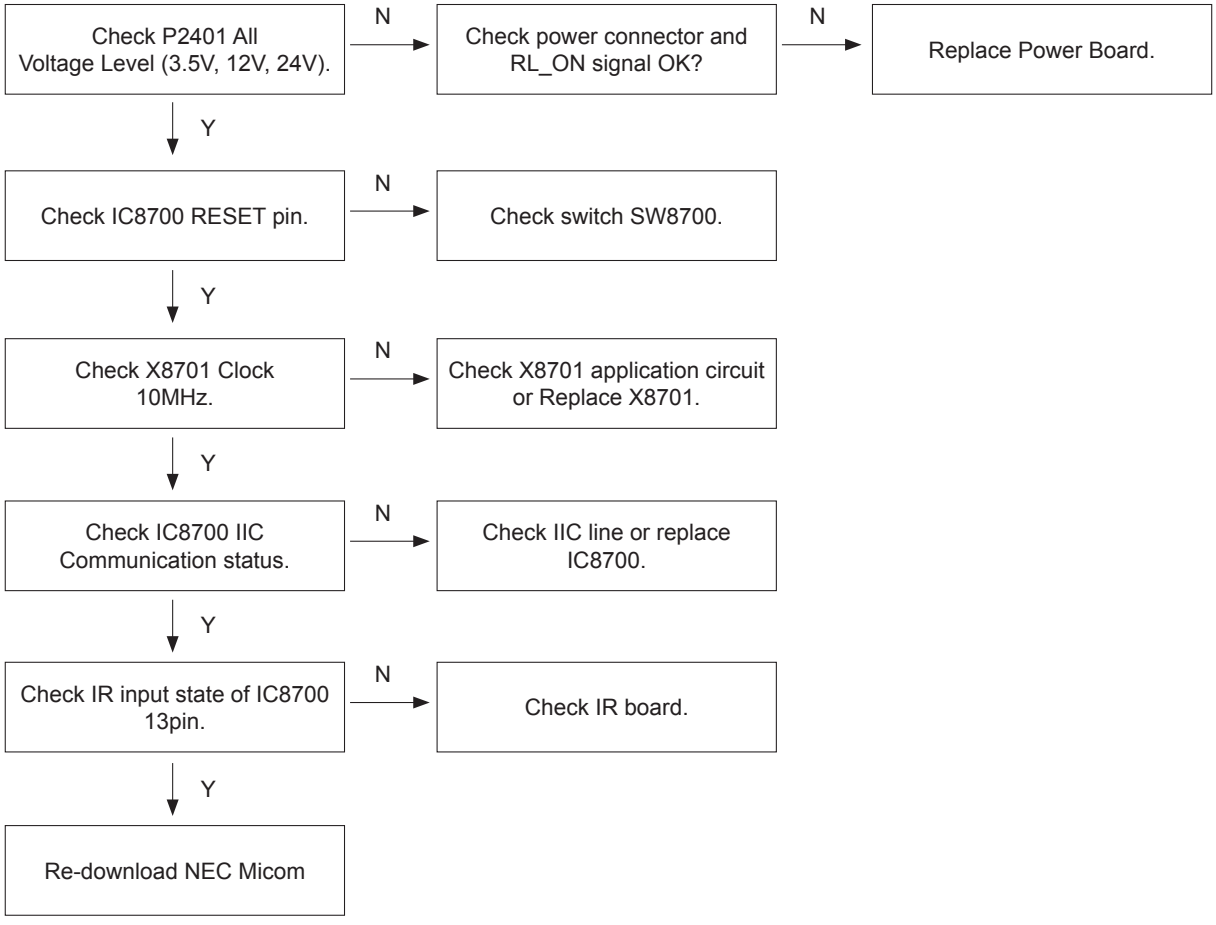

Copyright © 2012 LG Electronics. Inc. All rights reserved.
Only for training and service purposes

LGE Internal Use Only

3. Analog RF Video Trouble Shooting guide

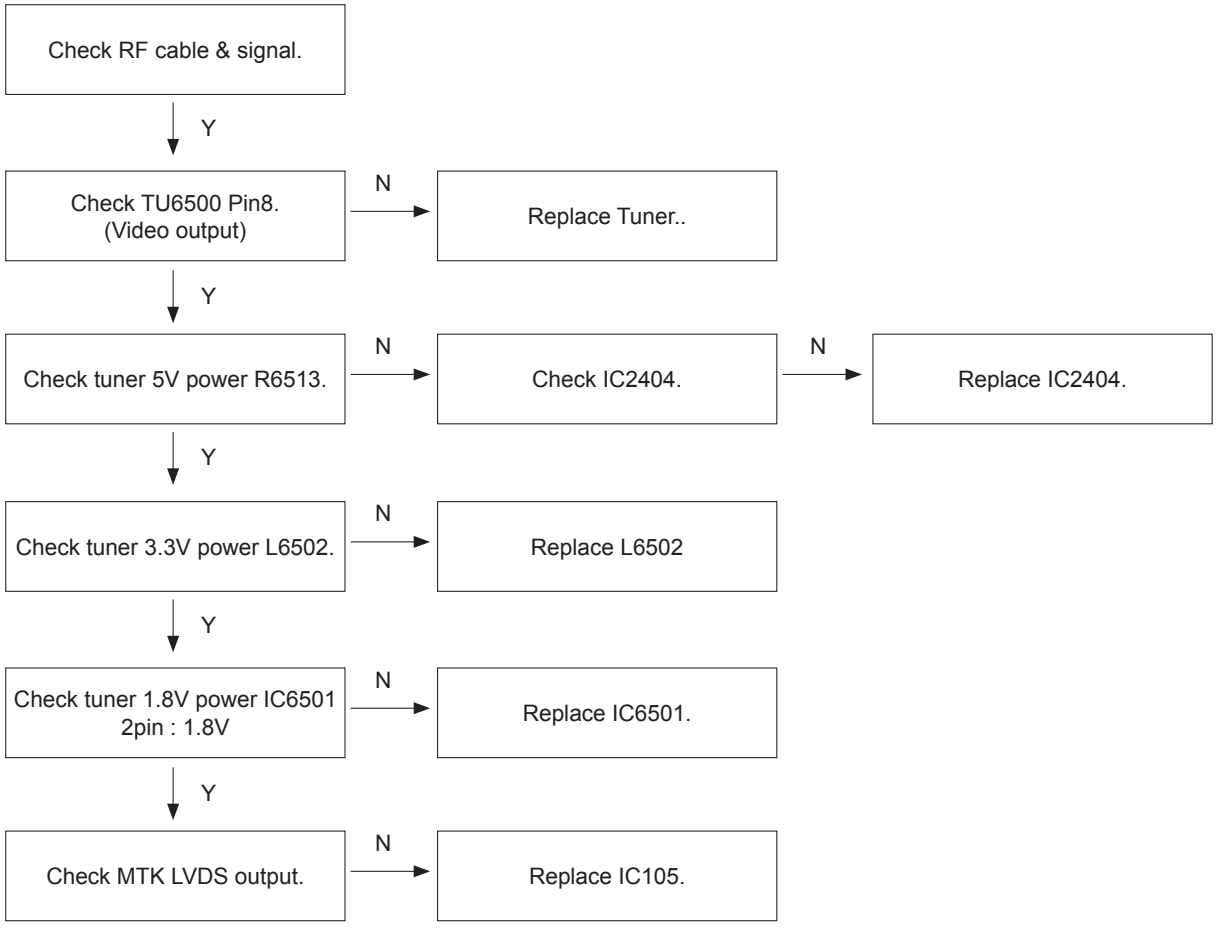

Copyright © 2012 LG Electronics. Inc. All rights reserved.
Only for training and service purposes

LGE Internal Use Only

4. Digital RF Trouble Shooting guide

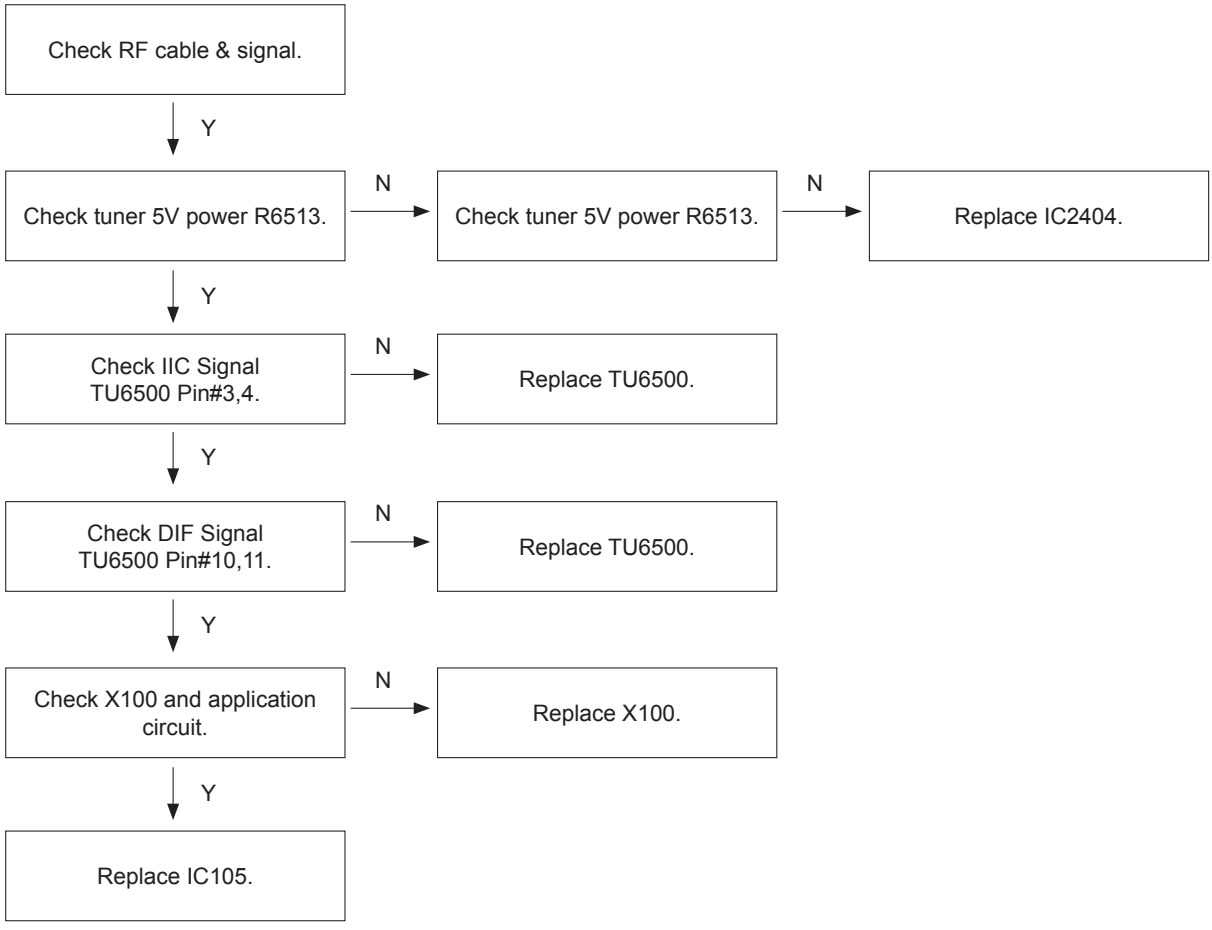

Copyright © 2012 LG Electronics. Inc. All rights reserved.
Only for training and service purposes

LGE Internal Use Only

5. AV Video Trouble Shooting guide

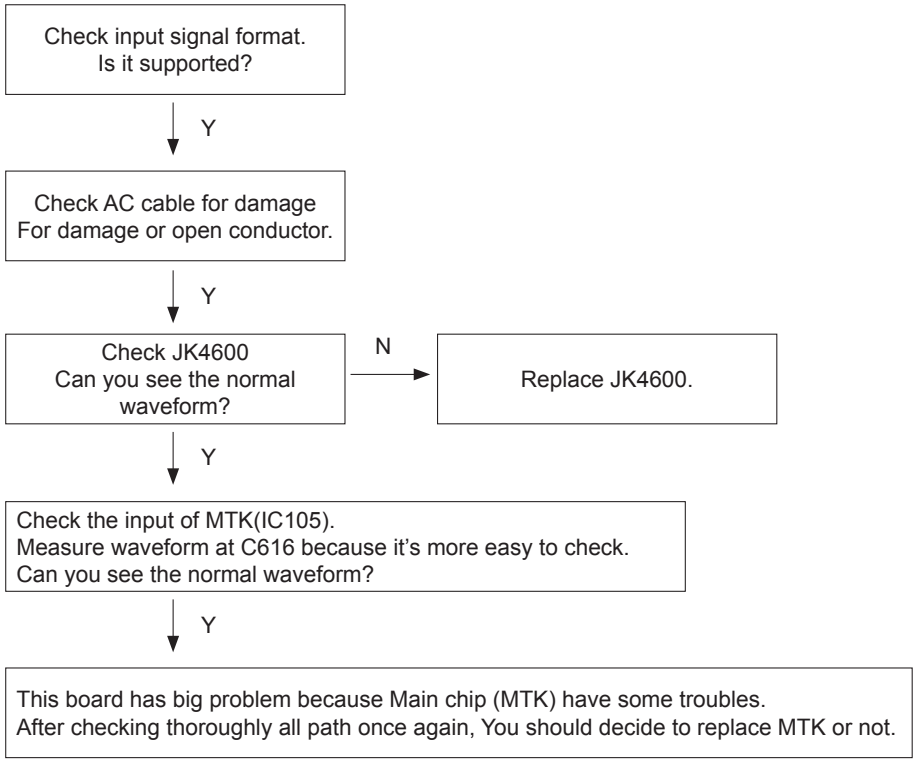

Copyright © 2012 LG Electronics. Inc. All rights reserved.
Only for training and service purposes

LGE Internal Use Only

6. HDMI Video Trouble Shooting guide

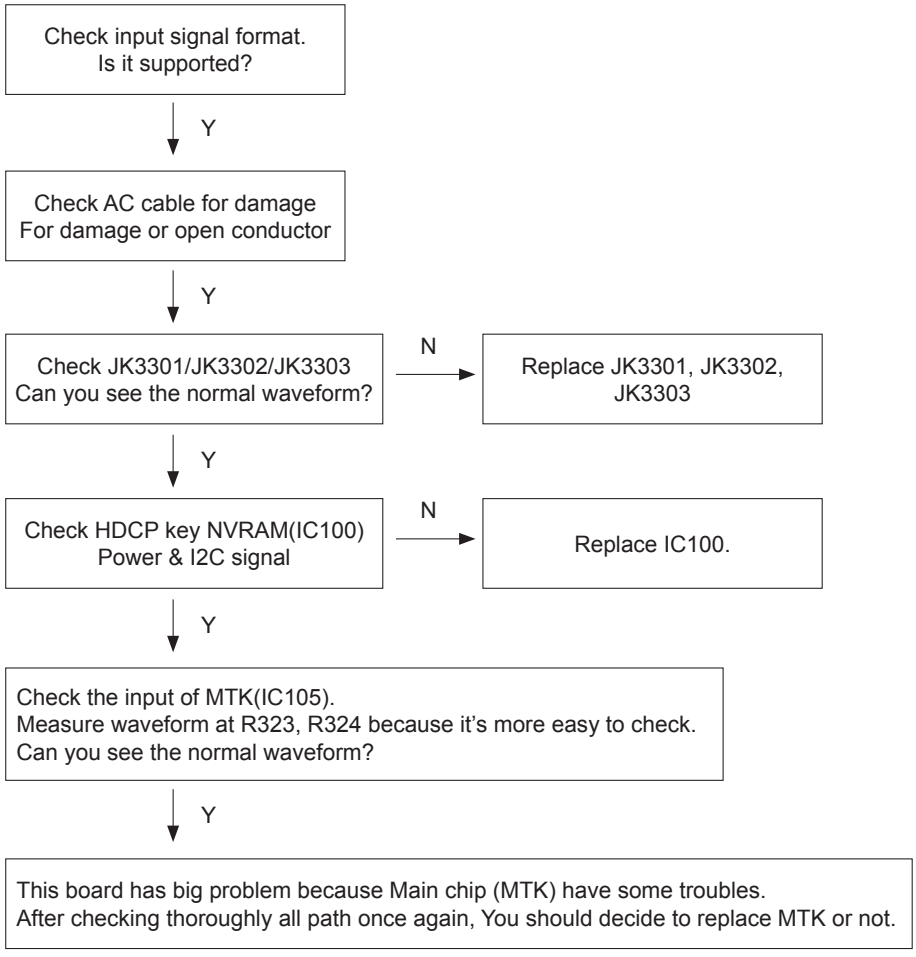

Copyright © 2012 LG Electronics. Inc. All rights reserved.
Only for training and service purposes

LGE Internal Use Only

7. RGB-PC Video Trouble Shooting guide

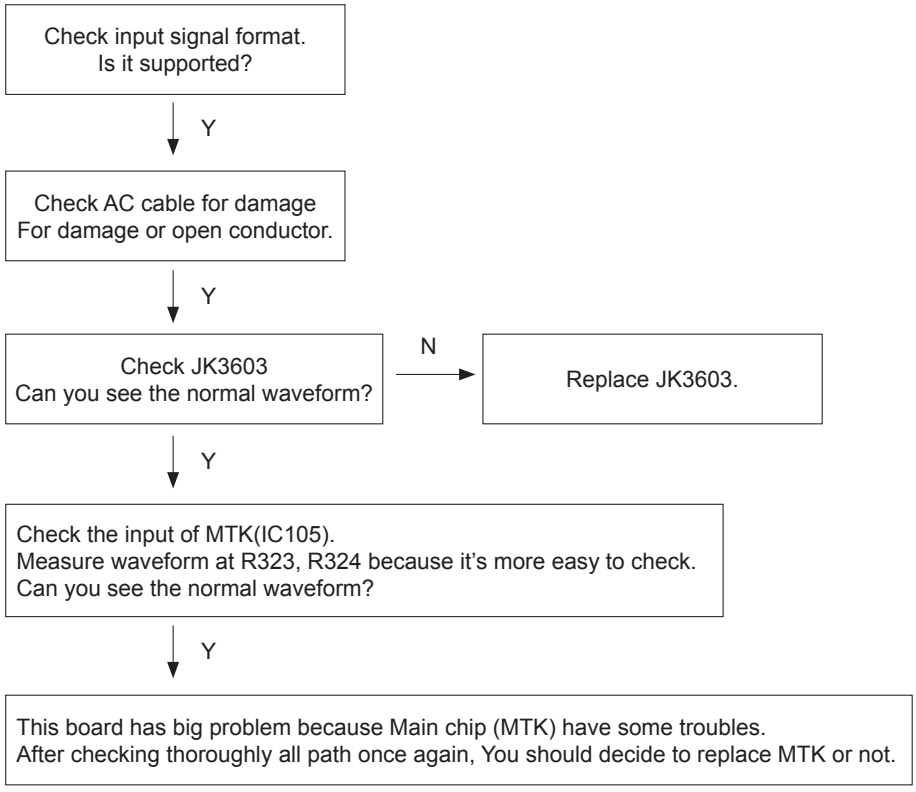

Copyright © 2012 LG Electronics. Inc. All rights reserved.
Only for training and service purposes

LGE Internal Use Only

8. Analog RF Audio Trouble Shooting guide

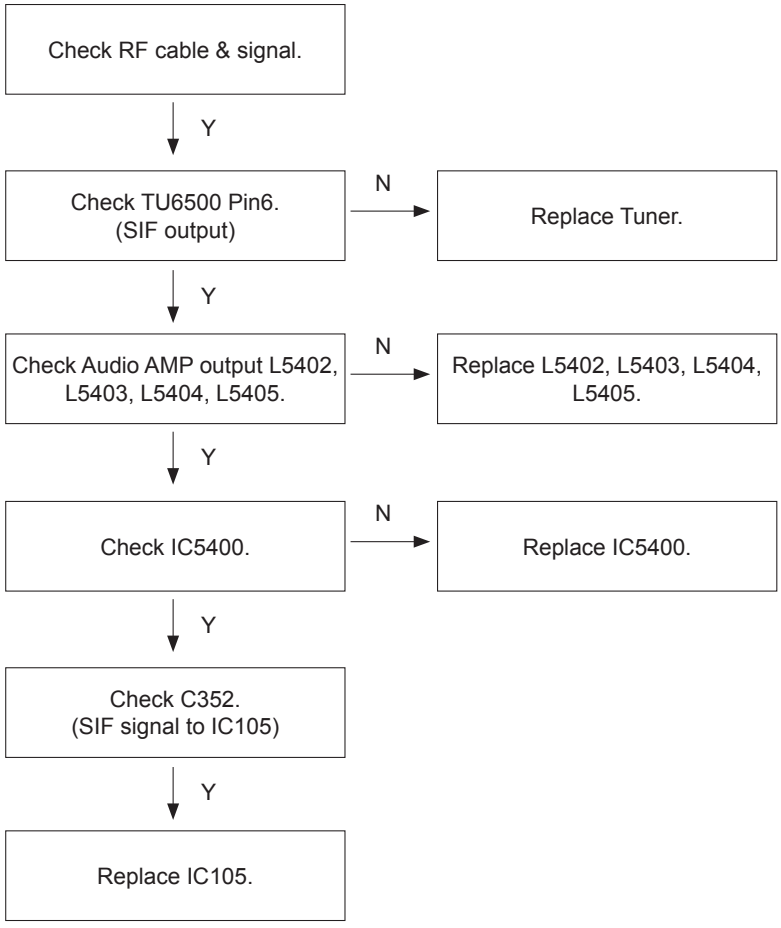

Copyright © 2012 LG Electronics. Inc. All rights reserved.
Only for training and service purposes

LGE Internal Use Only

9. AV / RGB-PC Audio in Trouble Shooting guide

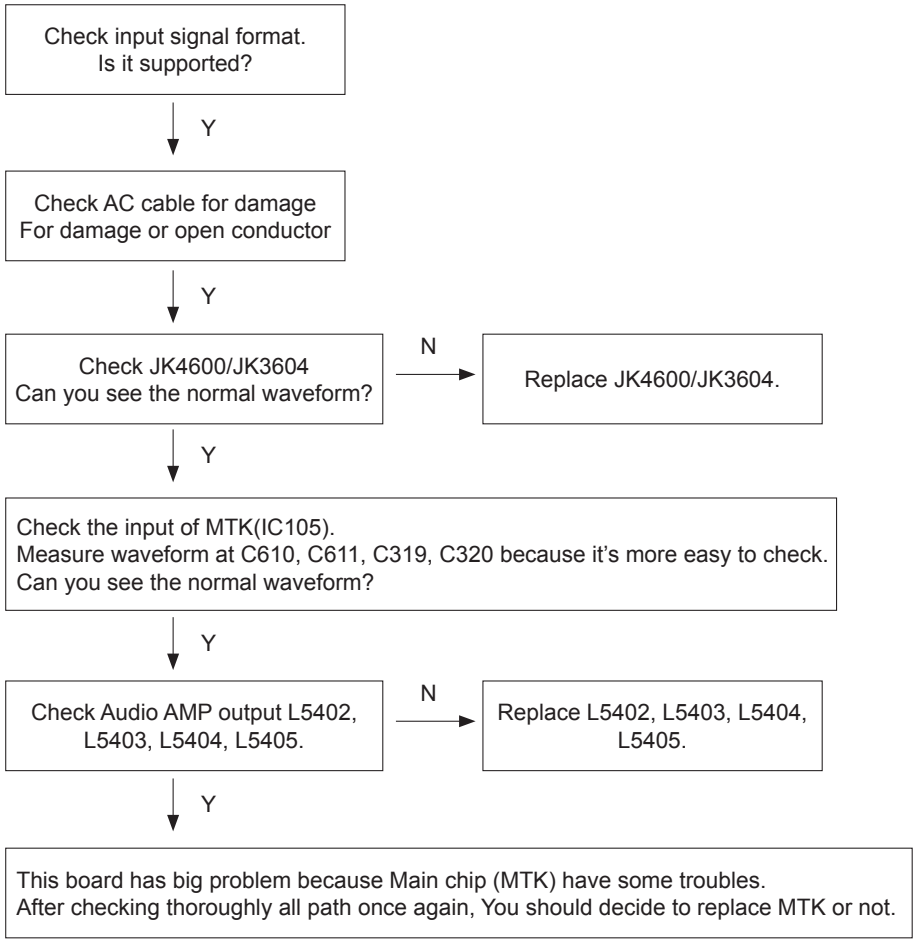

Copyright © 2012 LG Electronics. Inc. All rights reserved.
Only for training and service purposes

LGE Internal Use Only

10. HDMI Audio in Trouble Shooting guide

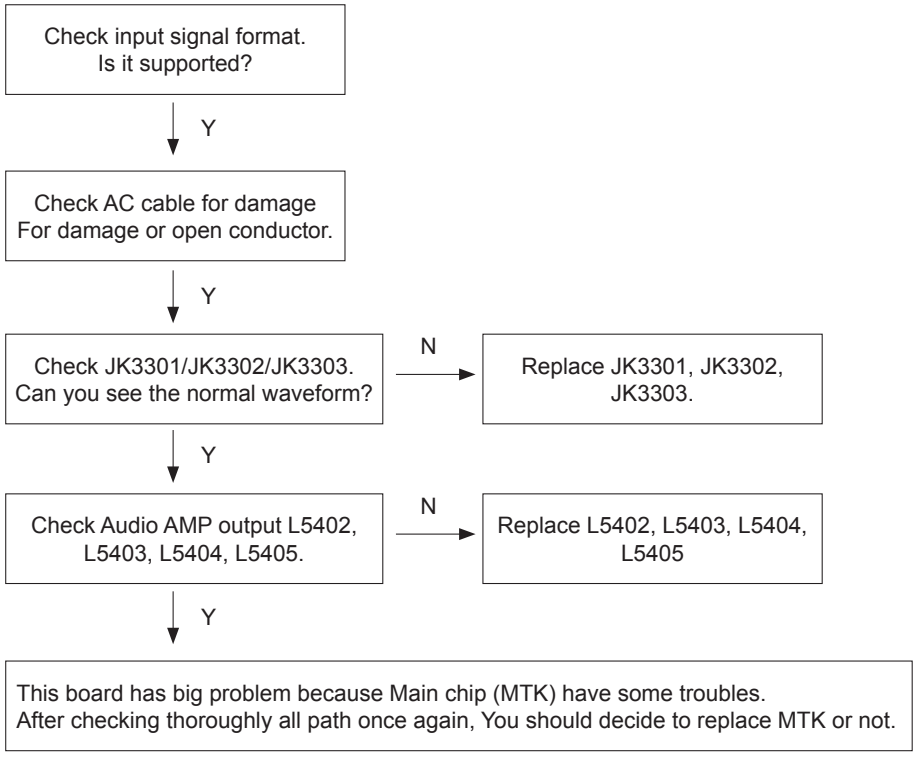

Copyright © 2012 LG Electronics. Inc. All rights reserved.
Only for training and service purposes

LGE Internal Use Only

BLOCK DIAGRAM

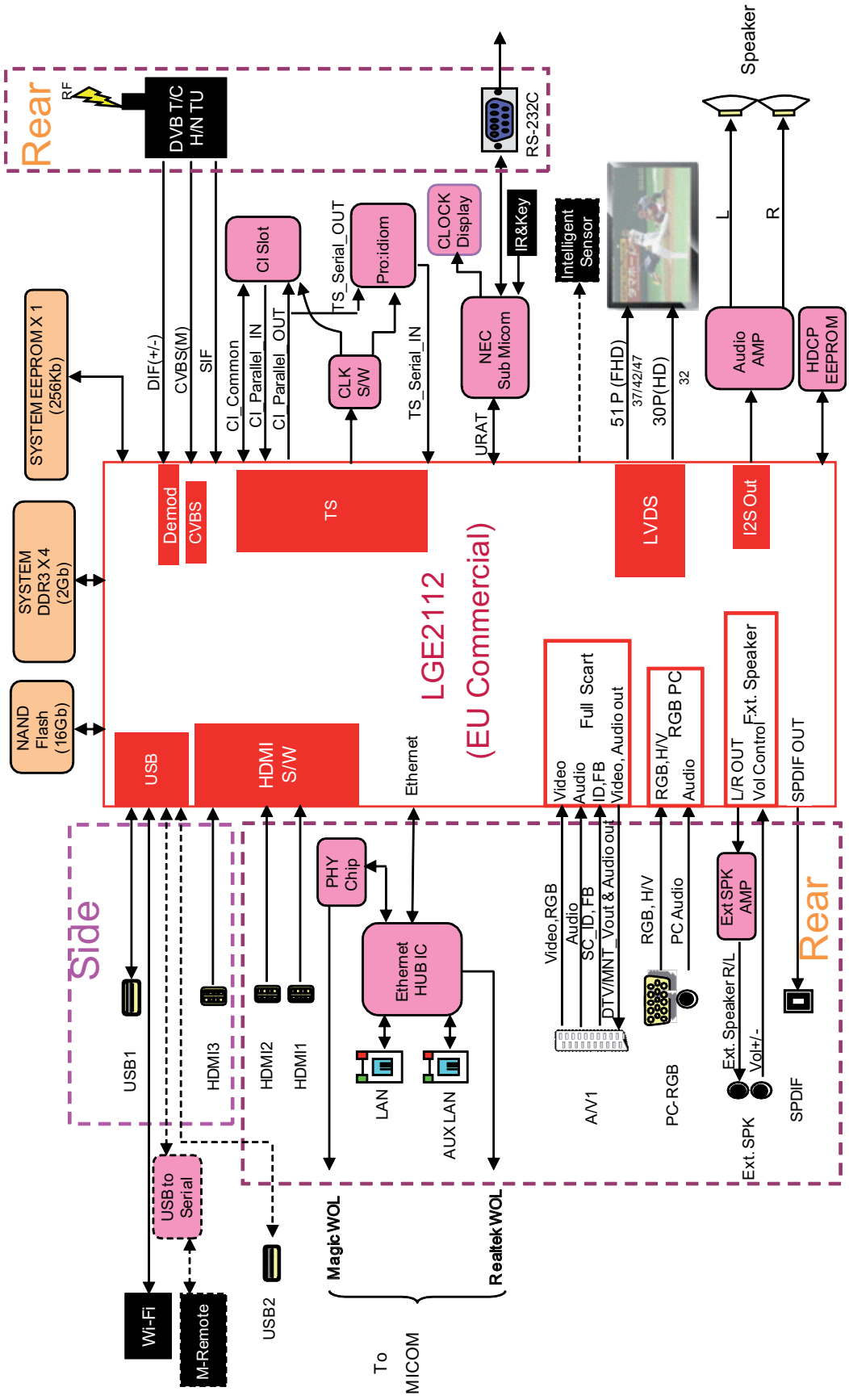

Copyright © 2012 LG Electronics. Inc. All rights reserved.
Only for training and service purposes

LGE Internal Use Only

EXPLODED VIEW

IMPORTANT SAFETY NOTICE

Many electrical and mechanical parts in this chassis have special safety-related characteristics. These parts are identified by ⚠ in the Schematic Diagram and EXPLODED VIEW.
It is essential that these special safety parts should be replaced with the same components as recommended in this manual to prevent X-RADIATION, Shock, Fire, or other Hazards.
Do not modify the original design without permission of manufacturer.

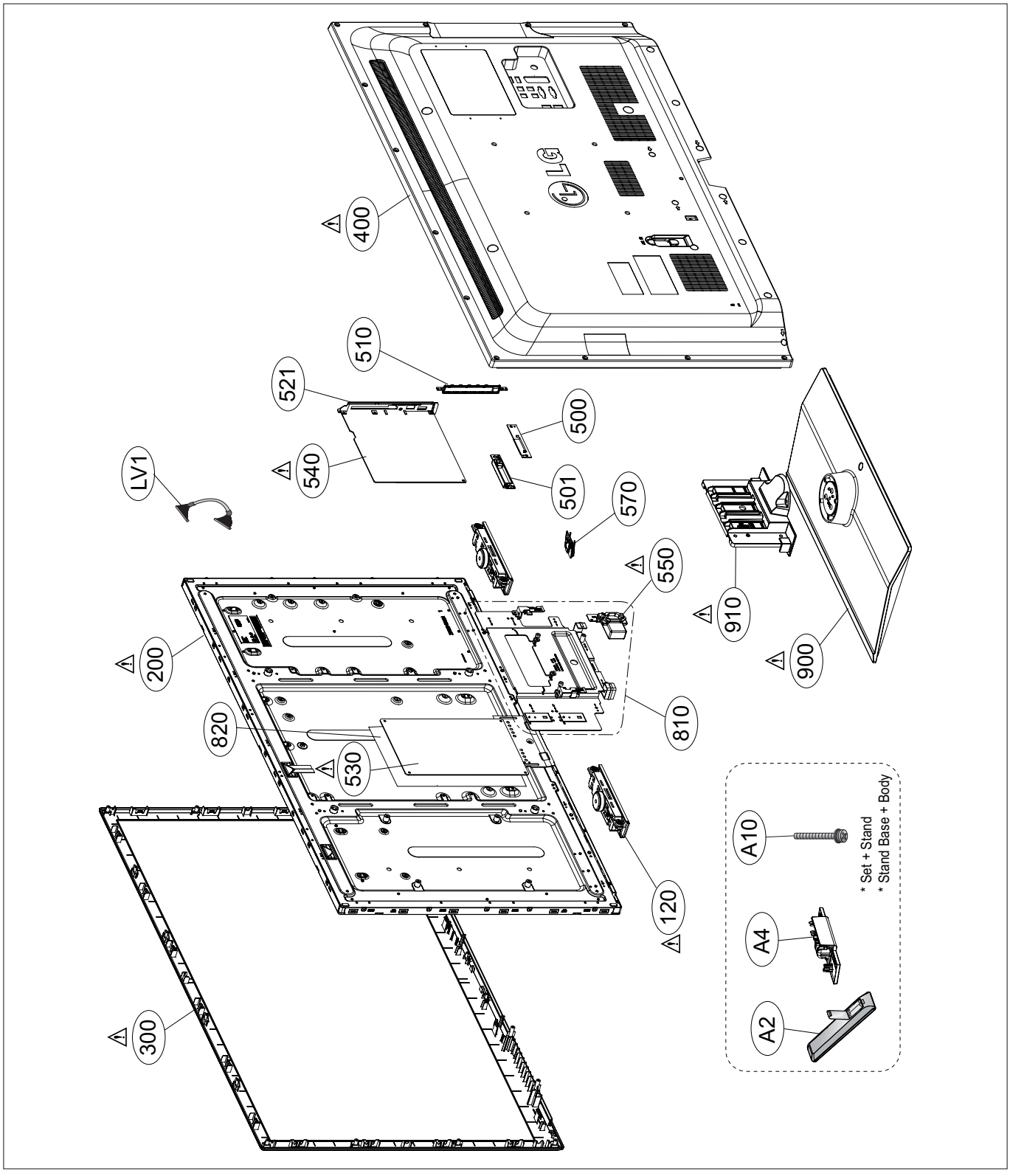

Copyright © 2012 LG Electronics. Inc. All rights reserved.
Only for training and service purposes

LGE Internal Use Only

EAX6430790* : LD22* / LC22*
EAX6443420* : LT22* / LJ22* / LA22* / LB22*

NVRAM

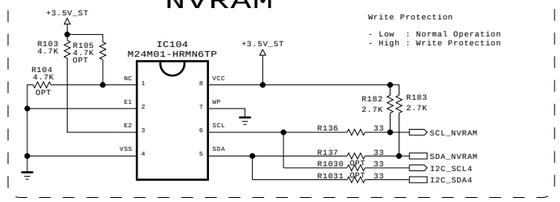

HDCP EEPROM

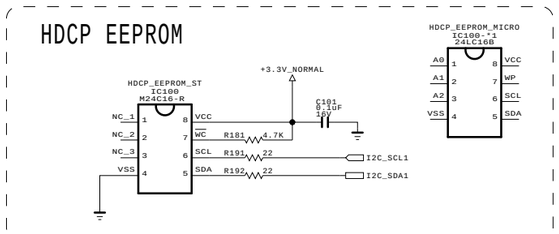

JTAG

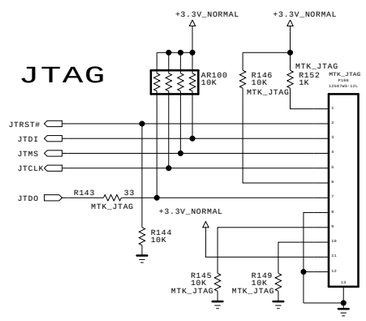

Close to eMMC Flash (IC8100)

Crystal Matching Test result : 27pF -> 20pF -> 24pF

X-TAL

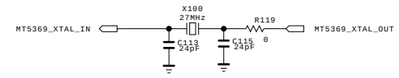

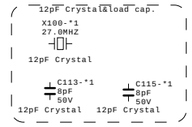

IC105 LGE2112

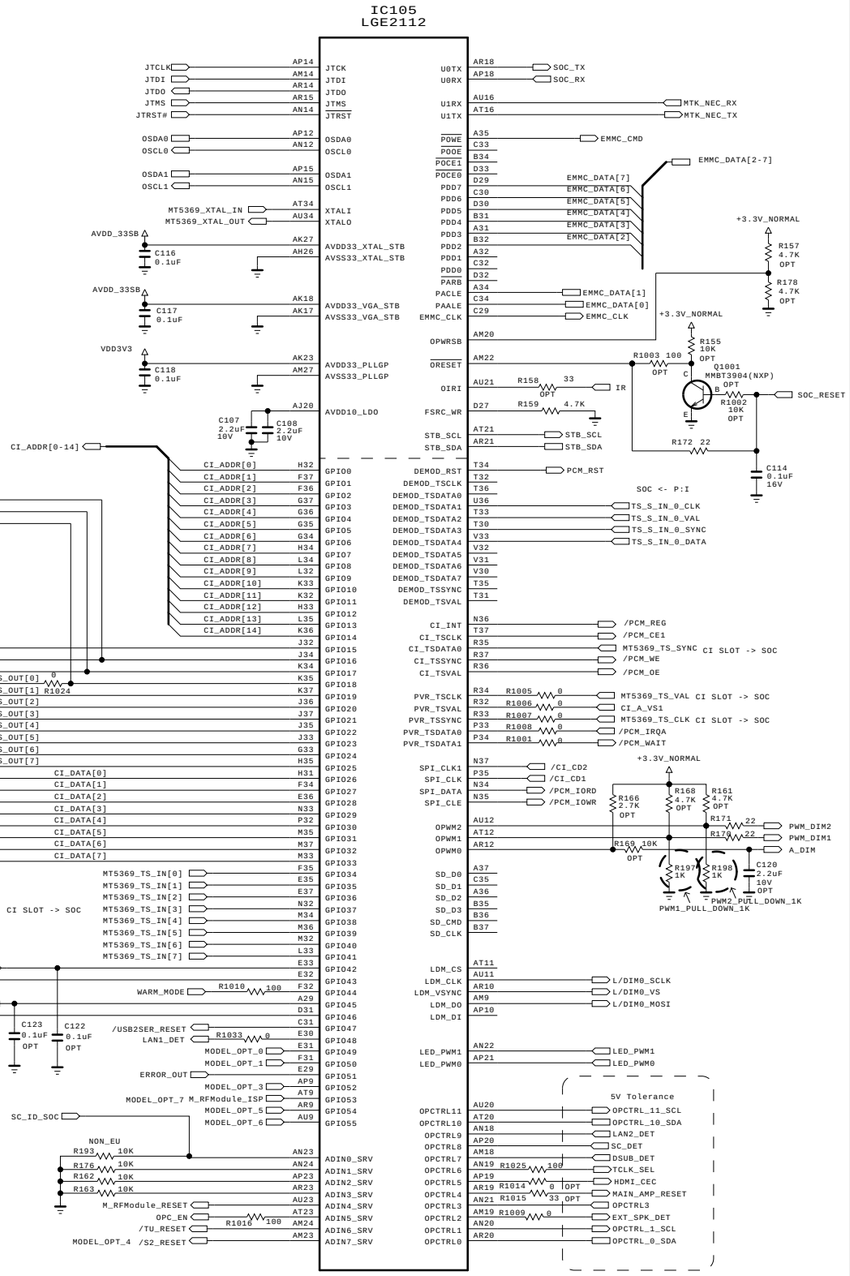

I2C

I2C_1 : AMP, L/DIMMING,HDCP KEY
I2C_2 : T-CON
I2C_3 : MICOM
I2C_4 : S/Demod,T2/Demod, LNB
I2C_5 : NVRAM
I2C_6 : TUNER_MOPLL(T/C,ATV)

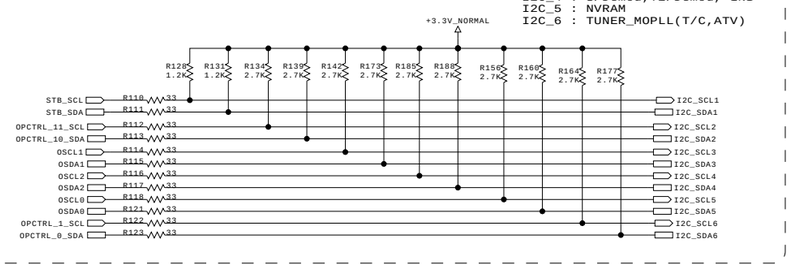

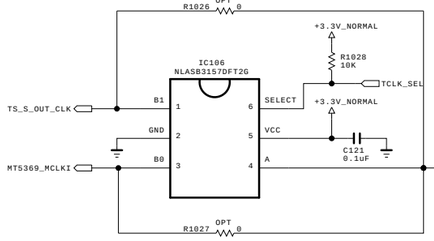

Model Option

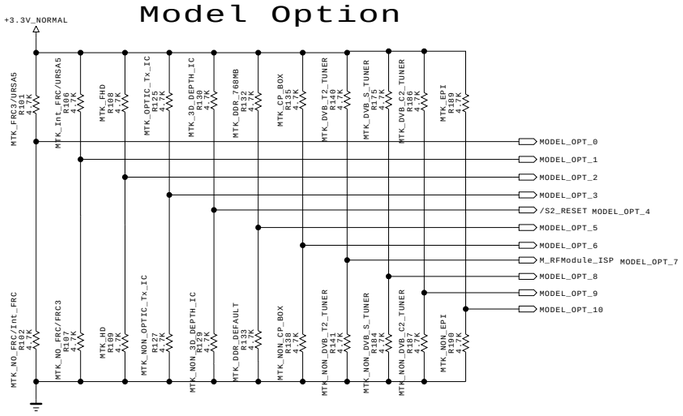

	NO_FRC	SoC internal FRC	LG FRC2	Reserved
MODEL_OPT_0	0	0	1	1
MODEL_OPT_1	0	1	0	1

		HIGH	LOW
MODEL_OPT_2		FHD	HD
MODEL_OPT_3		OPTIC	NON_OPTIC
MODEL_OPT_4	3D DEPTH	3D_Depth_IC	NON_3D_Depth_IC
MODEL_OPT_5	DDR	DDR_768MB	DDR_Default
MODEL_OPT_6	CP BOX	Enable	Disable
MODEL_OPT_7	T2 Tuner	Support	Not Support
MODEL_OPT_8	S Tuner	Support	Not Support
MODEL_OPT_9	Reserved		Default
MODEL_OPT_10	EPI	Support	Not Support

MODEL OPTION 8 is just for CP Box
It should not be appiled at MP

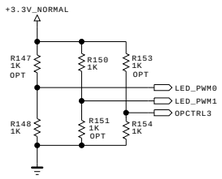

STRAPPING	LED_PWM0	LED_PWM1	OPCTRL3
ICE mode + 27M + Serial boot	0	0	0
ICE mode + 27M + ROM to Nand boot	0	0	1
ICE mode + 27M + Rom to eMMC boot from eMMC pins (share pins w/s NAND)	0	1	0
ICE mode + 27M + ROM to eMMC boot from SDIO pins	0	1	1

THE ⚠ SYMBOL MARK OF THIS SCHEMETIC DIAGRAM INCORPORATES SPECIAL FEATURES IMPORTANT FOR PROTECTION FROM X-RADIATION. FILRE AND ELECTRICAL SHOCK HAZARDS, WHEN SERVICING IF IS ESSENTIAL THAT ONLY MANUFATURES SPECFIED PARTS BE USED FOR THE CRITICAL COMPONENTS IN THE ⚠ SYMBOL MARK OF THE SCHEMETIC.

SECRET
LGElectronics

LG ELECTRONICS

MODEL	xxLT760H-UA	DATE	2011.09.29
BLOCK	MID_MAIN_1	SHEET	8

Copyright © 2012 LG Electronics. Inc. All rights reserved.
Only for training and service purposes

LGE Internal Use Only

PLACE AT JACK SIDE

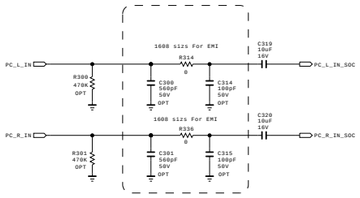

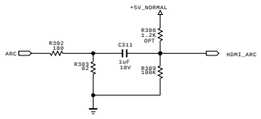

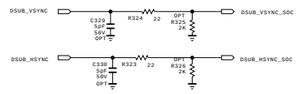

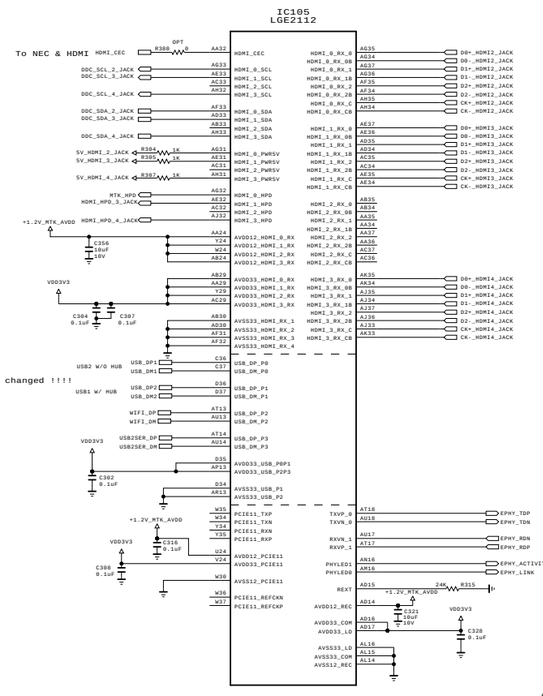

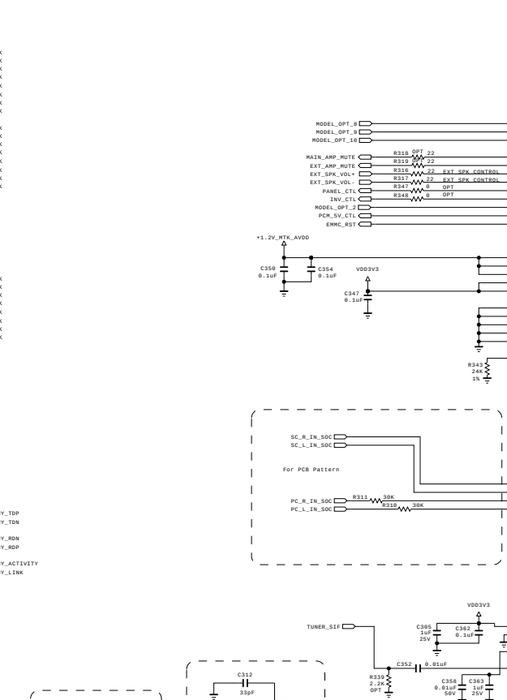

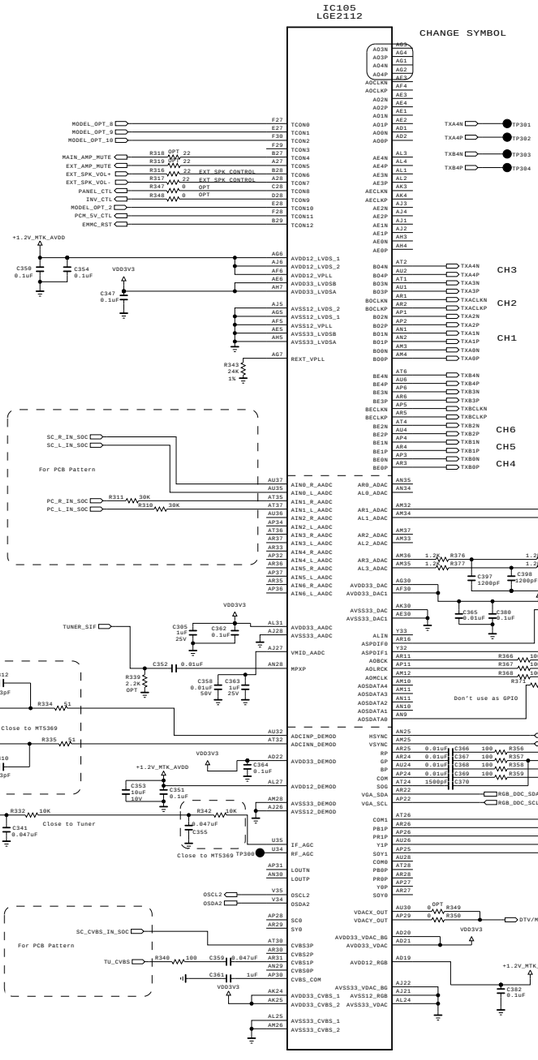

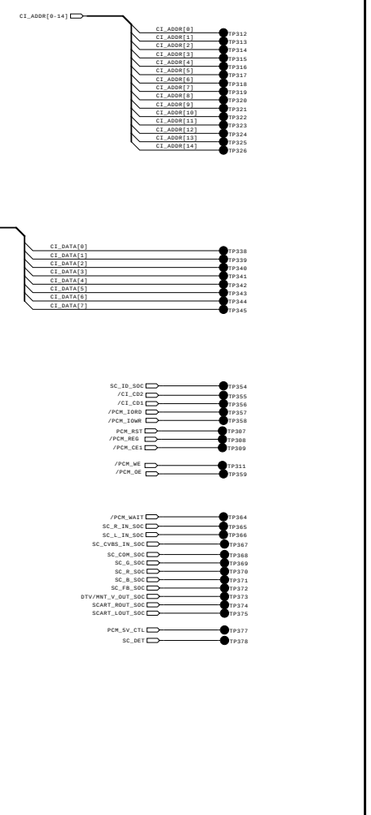

THE ⚠ SYMBOL MARK OF THIS SCHEMETIC DIAGRAM INCORPORATES SPECIAL FEATURES IMPORTANT FOR PROTECTION FROM X-RADIATION. FILRE AND ELECTRICAL SHOCK HAZARDS, WHEN SERVICING IF IS ESSENTIAL THAT ONLY MANUFATURES SPECFIED PARTS BE USED FOR THE CRITICAL COMPONENTS IN THE ⚠ SYMBOL MARK OF THE SCHEMETIC.

SECRET
LGElectronics

LG ELECTRONICS

MODEL	xxLT760H-UA	DATE	2011.09.29
BLOCK	MID_MAIN_2	SHEET	9

Copyright © 2012 LG Electronics. Inc. All rights reserved.
Only for training and service purposes

LGE Internal Use Only

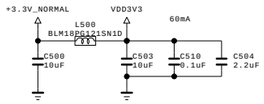

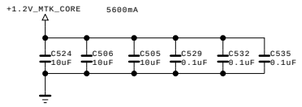

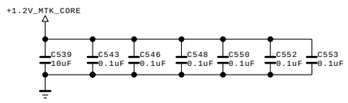

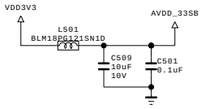

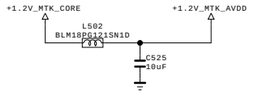

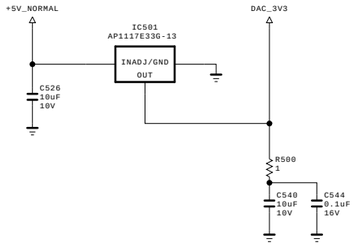

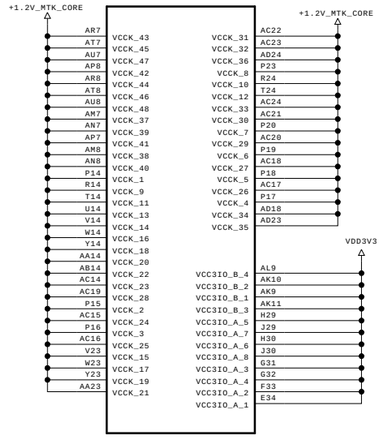

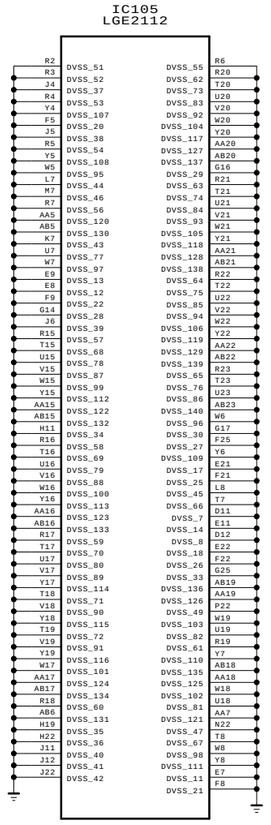

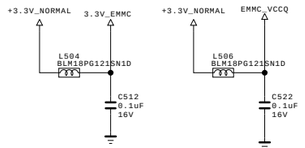

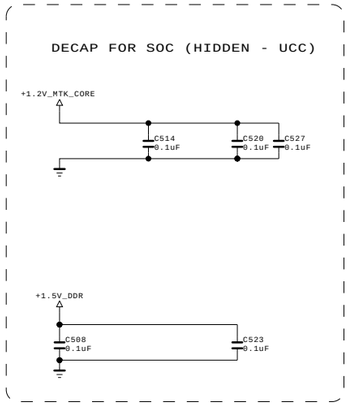

THE ⚠ SYMBOL MARK OF THIS SCHEMETIC DIAGRAM INCORPORATES SPECIAL FEATURES IMPORTANT FOR PROTECTION FROM X-RADIATION. FILRE AND ELECTRICAL SHOCK HAZARDS, WHEN SERVICING IF IS ESSENTIAL THAT ONLY MANUFATURES SPECFIED PARTS BE USED FOR THE CRITICAL COMPONENTS IN THE ⚠ SYMBOL MARK OF THE SCHEMETIC.

SECRET

LGElectronics

LG ELECTRONICS

MODEL	xxLT760H-UA	DATE	2011.09.29
BLOCK	MID_MAIN_3	SHEET	10

Copyright © 2012 LG Electronics. Inc. All rights reserved.
Only for training and service purposes

LGE Internal Use Only

PLACE AT JACK SIDE

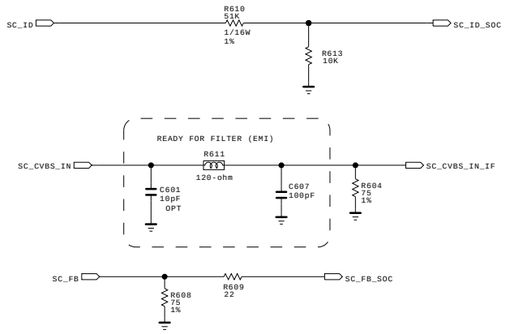

PLACE AT MAIN SOC SIDE

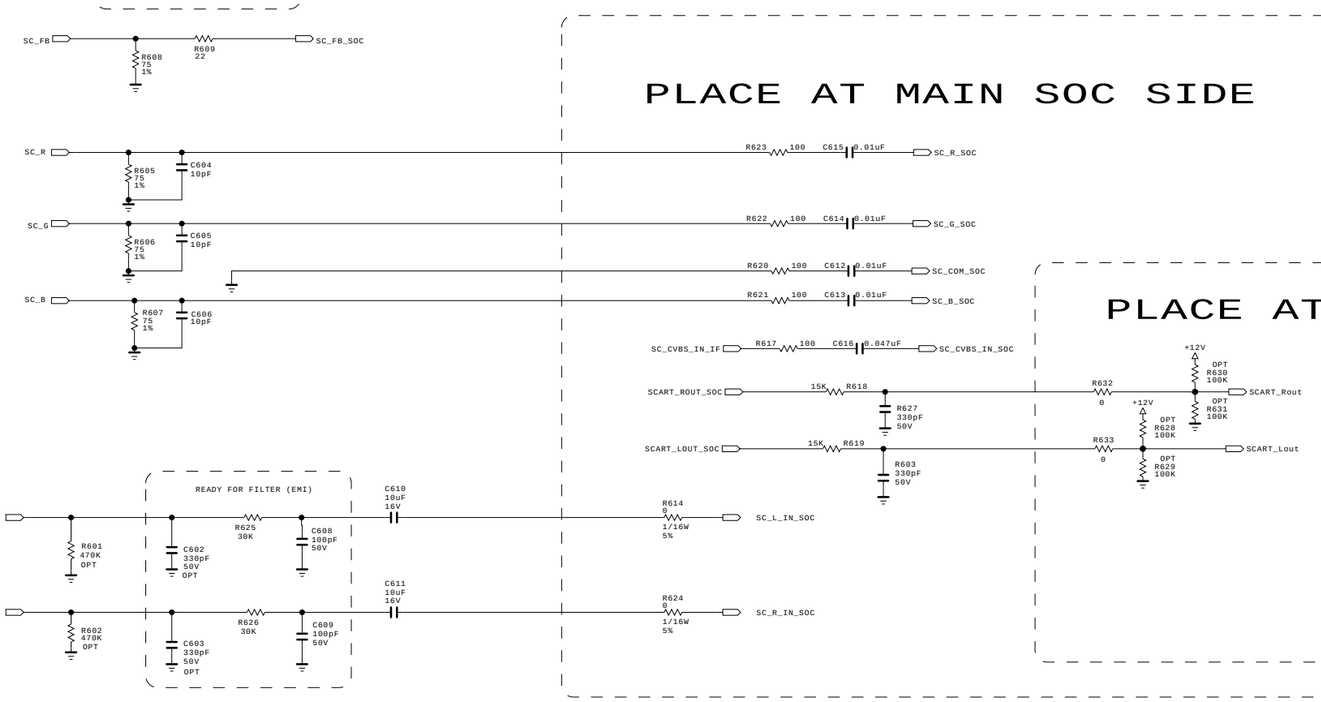

PLACE AT IC8602

THE ⚠ SYMBOL MARK OF THIS SCHEMETIC DIAGRAM INCORPORATES SPECIAL FEATURES IMPORTANT FOR PROTECTION FROM X-RADIATION. FILRE AND ELECTRICAL SHOCK HAZARDS, WHEN SERVICING IF IS ESSENTIAL THAT ONLY MANUFATURES SPECFIED PARTS BE USED FOR THE CRITICAL COMPONENTS IN THE ⚠ SYMBOL MARK OF THE SCHEMETIC.

SECRET
LGElectronics

LG ELECTRONICS

MODEL	MID_MAIN_SCART	DATE	2011.11.21
BLOCK		SHEET	11

Copyright © 2012 LG Electronics. Inc. All rights reserved.
Only for training and service purposes

LGE Internal Use Only

IC701
H5TQ2G63BFR-PBC

IC703
H5TQ2G63BFR-PBC

IC105
LGE2112

IC702
H5TQ2G63BFR-PBC

IC704
H5TQ2G63BFR-PBC

DDR_HYNIX

DDR_NANYA

THE ⚠ SYMBOL MARK OF THIS SCHEMETIC DIAGRAM INCORPORATES SPECIAL FEATURES IMPORTANT FOR PROTECTION FROM X-RADIATION. FILRE AND ELECTRICAL SHOCK HAZARDS, WHEN SERVICING IF IS ESSENTIAL THAT ONLY MANUFATURES SPECFIED PARTS BE USED FOR THE CRITICAL COMPONENTS IN THE ⚠ SYMBOL MARK OF THE SCHEMETIC.

SECRET
LGElectronics

LG ELECTRONICS

MODEL	xxLT760H-UA	DATE	2011.09.06
BLOCK	DDR ONE SIDE	SHEET	12

Copyright © 2012 LG Electronics. Inc. All rights reserved.
Only for training and service purposes

LGE Internal Use Only

CI TS INPUT

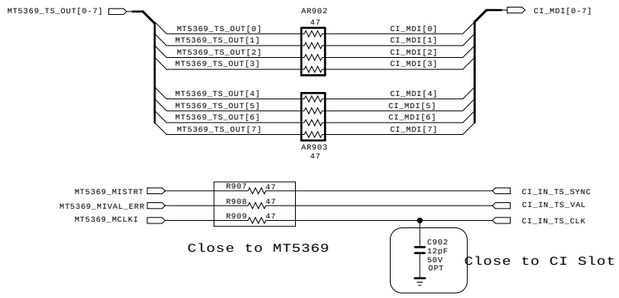

CI TS OUTPUT

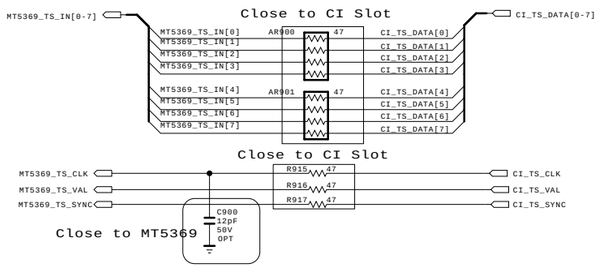

CI DETECT

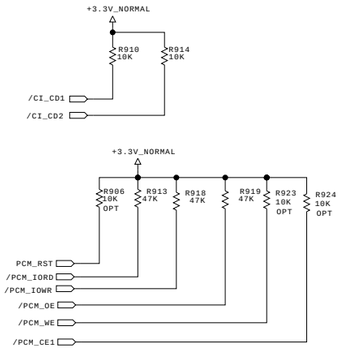

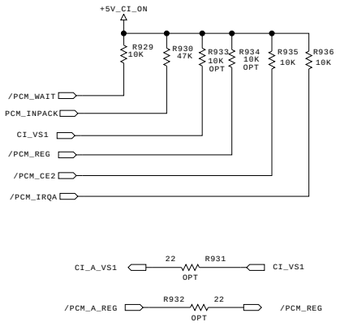

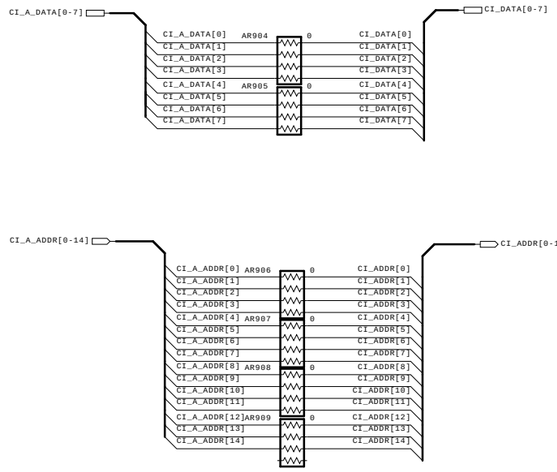

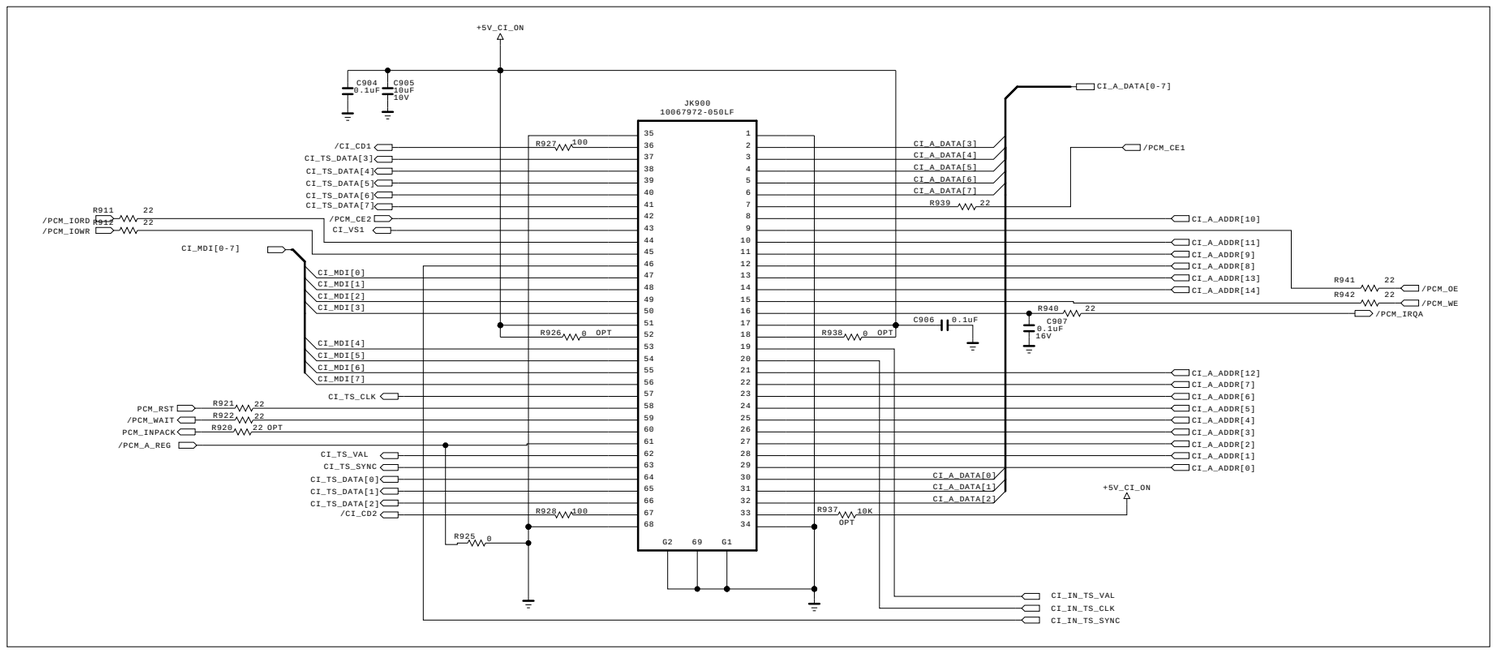

THE ⚠ SYMBOL MARK OF THIS SCHEMETIC DIAGRAM INCORPORATES SPECIAL FEATURES IMPORTANT FOR PROTECTION FROM X-RADIATION. FILRE AND ELECTRICAL SHOCK HAZARDS, WHEN SERVICING IF IS ESSENTIAL THAT ONLY MANUFATURES SPECFIED PARTS BE USED FOR THE CRITICAL COMPONENTS IN THE ⚠ SYMBOL MARK OF THE SCHEMETIC.

SECRET
LGElectronics

LG ELECTRONICS

MODEL	MID_MAIN_CI	DATE	2011.09.26
BLOCK		SHEET	13

Copyright © 2012 LG Electronics. Inc. All rights reserved.
Only for training and service purposes

LGE Internal Use Only

FROM LIPS & POWER B/D

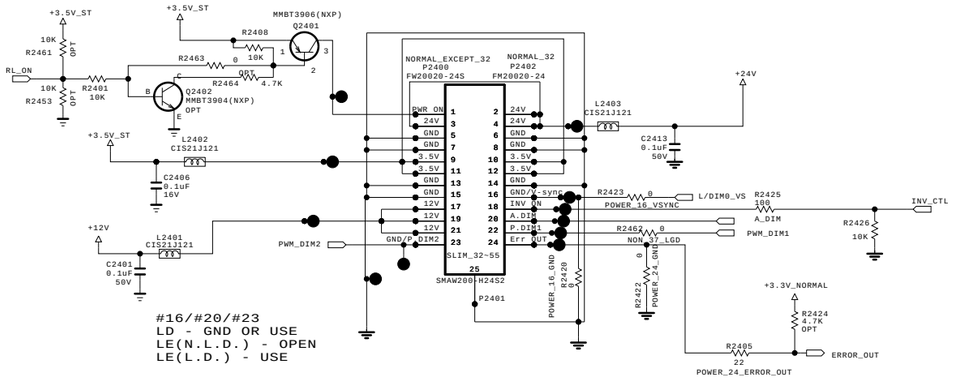

#16/#20/#23
LD - GND OR USE
LE(N.L.D.) - OPEN
LE(L.D.) - USE

PANEL_POWER

TYP 1450mA

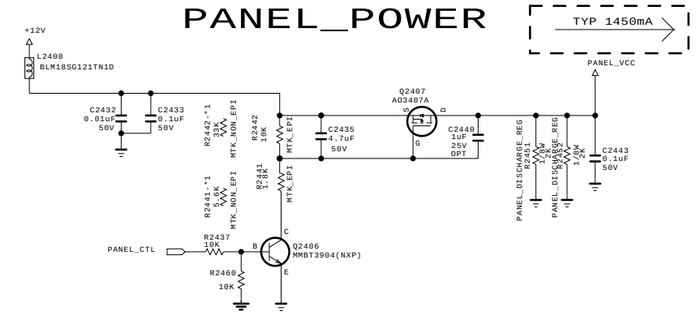

FOR LPB Download

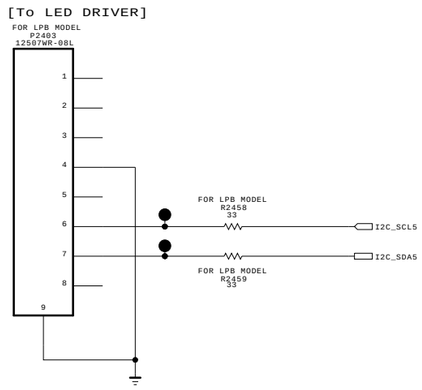

Power_DET

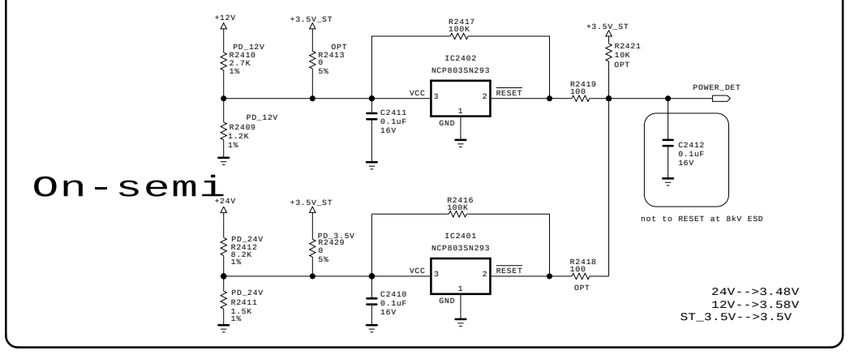

24V-->3.48V
12V-->3.58V
ST_3.5V-->3.5V

+5V_Normal

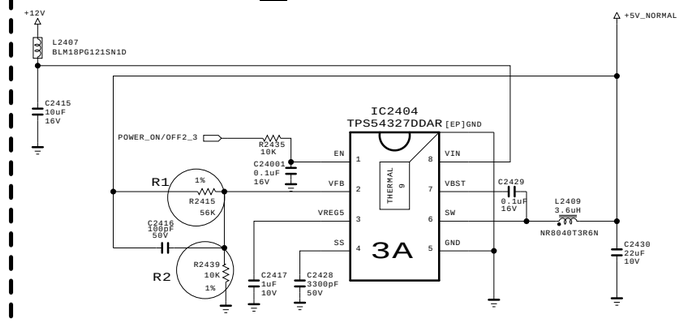

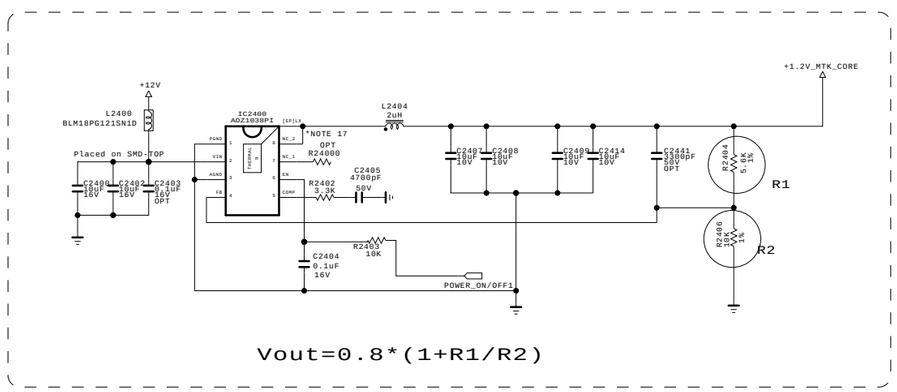

Vout=0.8*(1+R1/R2)

DDR MAIN 1.5V

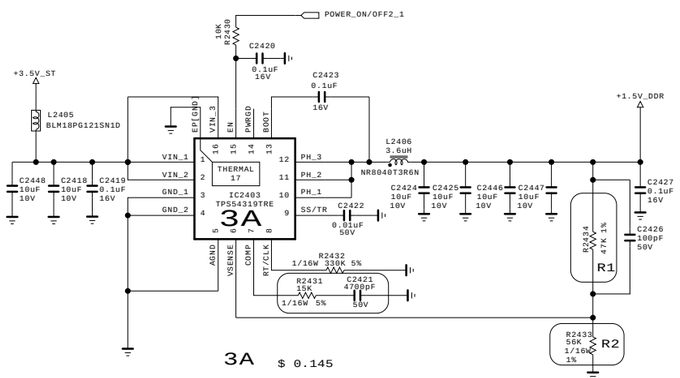

3A $ 0.145

Vout=0.827*(1+R1/R2)=1.521V

+3.3V_NORMAL

MAX 3.4 A

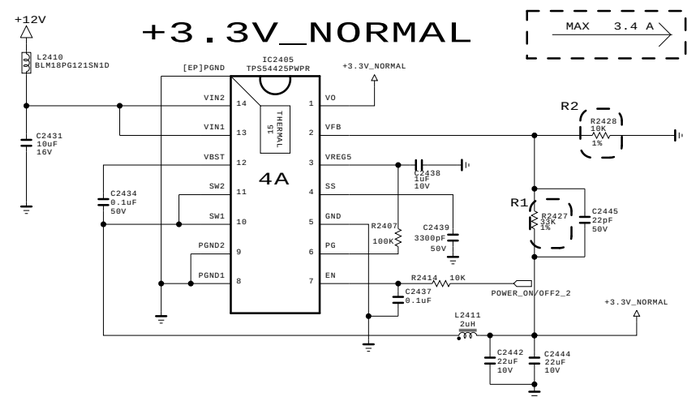

Vout=(0.763+0.0017*Vout.set)*(1+R1/R2)

THE ⚠ SYMBOL MARK OF THIS SCHEMETIC DIAGRAM INCORPORATES SPECIAL FEATURES IMPORTANT FOR PROTECTION FROM X-RADIATION. FILRE AND ELECTRICAL SHOCK HAZARDS, WHEN SERVICING IF IS ESSENTIAL THAT ONLY MANUFATURES SPECFIED PARTS BE USED FOR THE CRITICAL COMPONENTS IN THE ⚠ SYMBOL MARK OF THE SCHEMETIC.

SECRET
LGElectronics

LG ELECTRONICS

MODEL	xxLT760H-UA	DATE	2011.09.29
BLOCK	MID_POWER	SHEET	24

Copyright © 2012 LG Electronics. Inc. All rights reserved.
Only for training and service purposes

LGE Internal Use Only

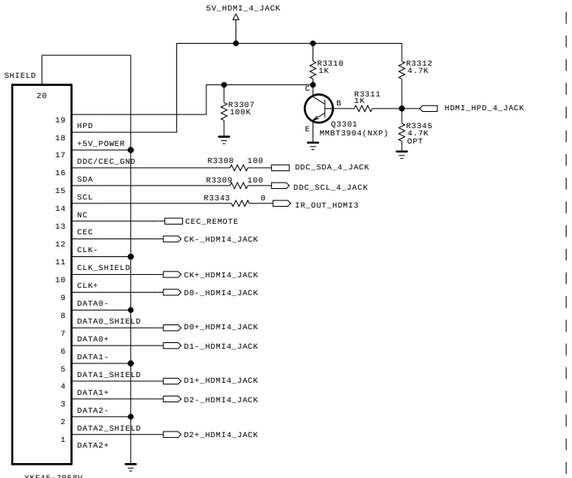

UI : HDMI2

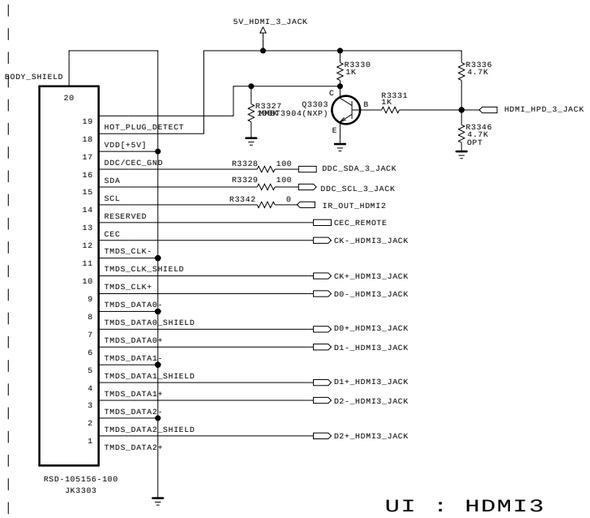

UI : HDMI3

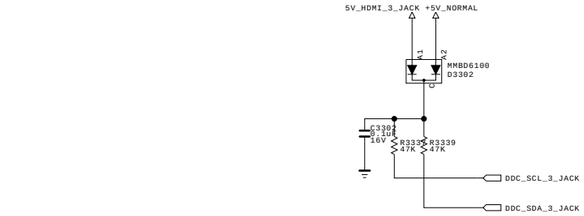

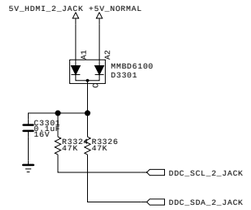

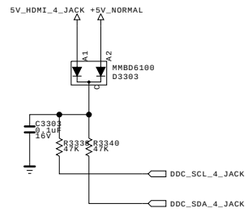

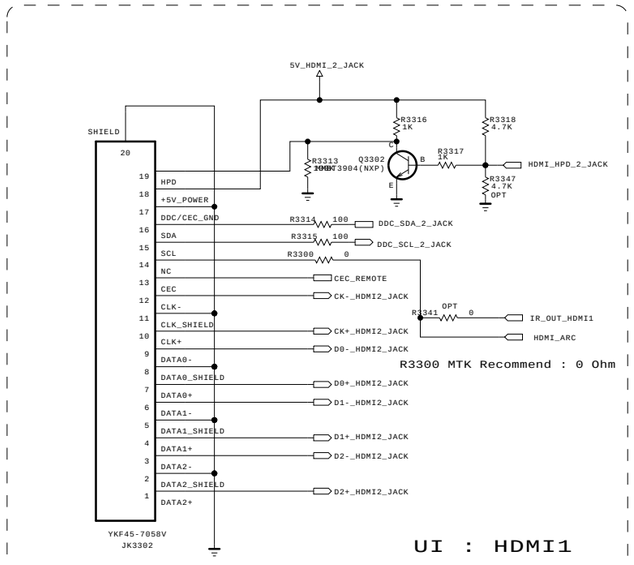

R3300 MTK Recommend : 0 Ohm

UI : HDMI1

HPD SWITCH

HPD_CTL	CONNECTION	
L	B0 - A	NEC_HPD
H	B1 - A	MTK_HPD

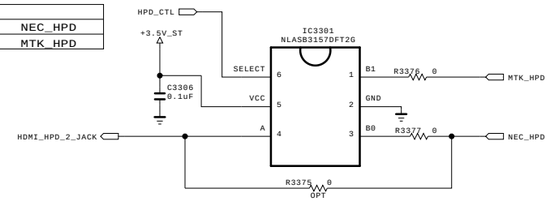

For CEC

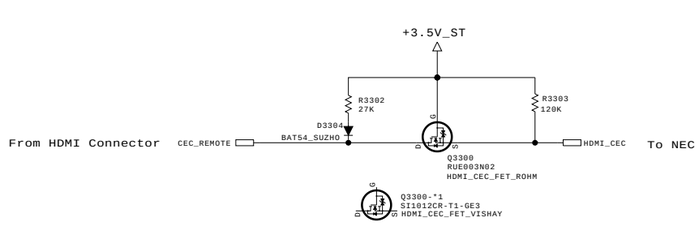

THE ⚠ SYMBOL MARK OF THIS SCHEMETIC DIAGRAM INCORPORATES SPECIAL FEATURES IMPORTANT FOR PROTECTION FROM X-RADIATION. FILRE AND ELECTRICAL SHOCK HAZARDS, WHEN SERVICING IF IS ESSENTIAL THAT ONLY MANUFATURES SPECFIED PARTS BE USED FOR THE CRITICAL COMPONENTS IN THE ⚠ SYMBOL MARK OF THE SCHEMETIC.

SECRET
LGElectronics

LG ELECTRONICS

MODEL	xxLT760H-UA	DATE	2011.09.29
BLOCK	HDMI 4	SHEET	33

Copyright © 2012 LG Electronics. Inc. All rights reserved.
Only for training and service purposes

LGE Internal Use Only

RGB PC

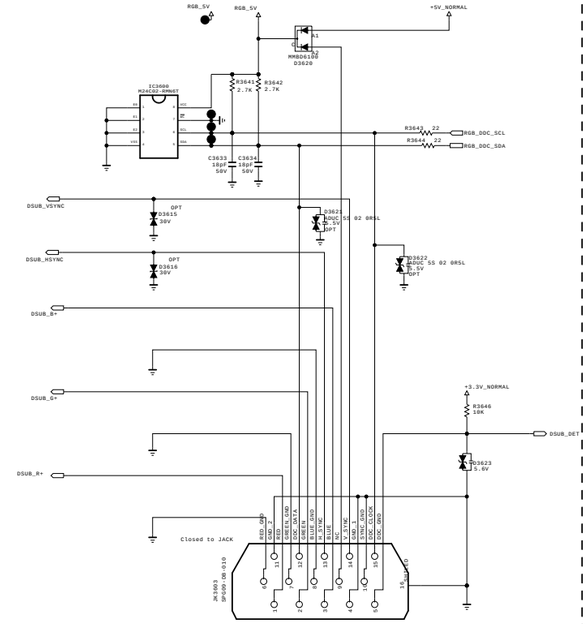

SPDIF OUT

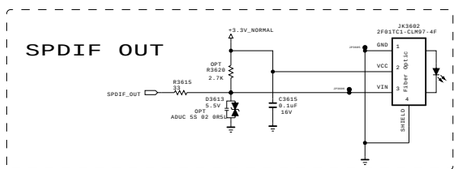

PC AUDIO

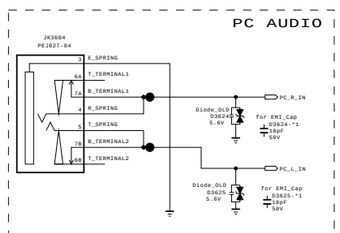

THE ⚠ SYMBOL MARK OF THIS SCHEMETIC DIAGRAM INCORPORATES
SPECIAL FEATURES IMPORTANT FOR PROTECTION FROM X-RADIATION.
FILRE AND ELECTRICAL SHOCK HAZARDS, WHEN SERVICING IF IS
ESSENTIAL THAT ONLY MANUFATURES SPECFIED PARTS BE USED FOR
THE CRITICAL COMPONENTS IN THE ⚠ SYMBOL MARK OF THE SCHEMETIC.

SECRET
LGElectronics

LG ELECTRONICS

MODEL	xxLT760H-UA	DATE	2011.09.29
BLOCK	JACK HIGH / MID	SHEET	36

Copyright © 2012 LG Electronics. Inc. All rights reserved.
Only for training and service purposes

LGE Internal Use Only

RS232C

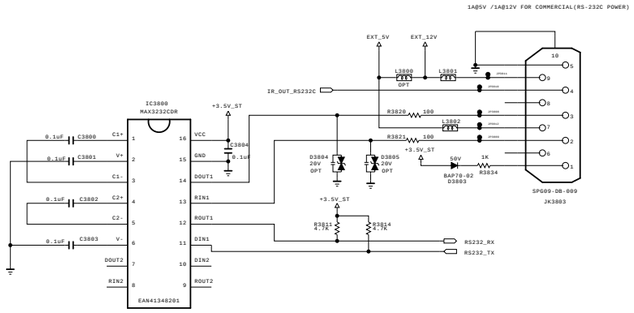

EXT UART SWITCH

DBG_SW	CONNECTION	
L	B0 - A	MTK ADJ
H	B1 - A	MTK DEBUG

UART_SW2	CONNECTION	
L	B0 - A	Interactive
H	B1 - A	USB Download

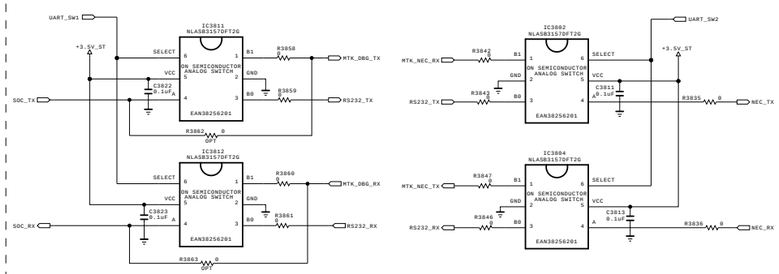

UART DBG SWITCH

UART_DBG_SW	CONNECTION	
L	B0 - A	Debug NEC
H	B1 - A	Debug MTK

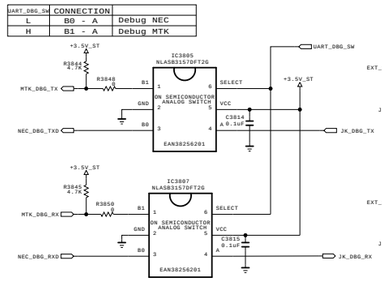

EXT_SPK_CONTROL & DBG OUT

DBG_SW	CONNECTION	
L	B0 - A	DEBUG_NEC/MTK
H	B1 - A	EXT.SPK VOL Control

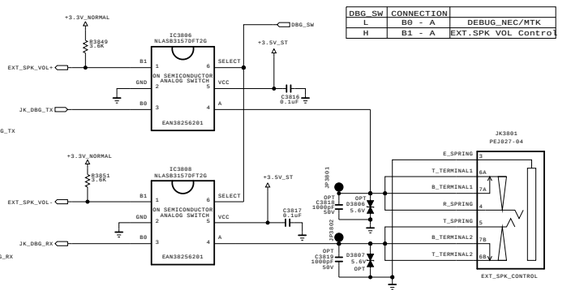

NVRAM I2C SWITCH

UART_SW2	CONNECTION	
L	B0 - A	NVRAM - NEC
H	B1 - A	NVRAM - MTK

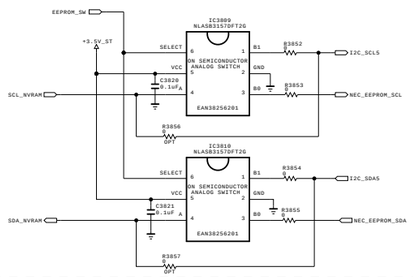

THE ⚠ SYMBOL MARK OF THIS SCHEMETIC DIAGRAM INCORPORATES SPECIAL FEATURES IMPORTANT FOR PROTECTION FROM X-RADIATION. FILRE AND ELECTRICAL SHOCK HAZARDS, WHEN SERVICING IF IS ESSENTIAL THAT ONLY MANUFATURES SPECFIED PARTS BE USED FOR THE CRITICAL COMPONENTS IN THE ⚠ SYMBOL MARK OF THE SCHEMETIC.

SECRET
LGElectronics

LG ELECTRONICS

MODEL	xxLT760H-UA	DATE	2011.09.29
BLOCK	JACK_COMMON	SHEET	38

Copyright © 2012 LG Electronics. Inc. All rights reserved.
Only for training and service purposes

LGE Internal Use Only

IR & KEY

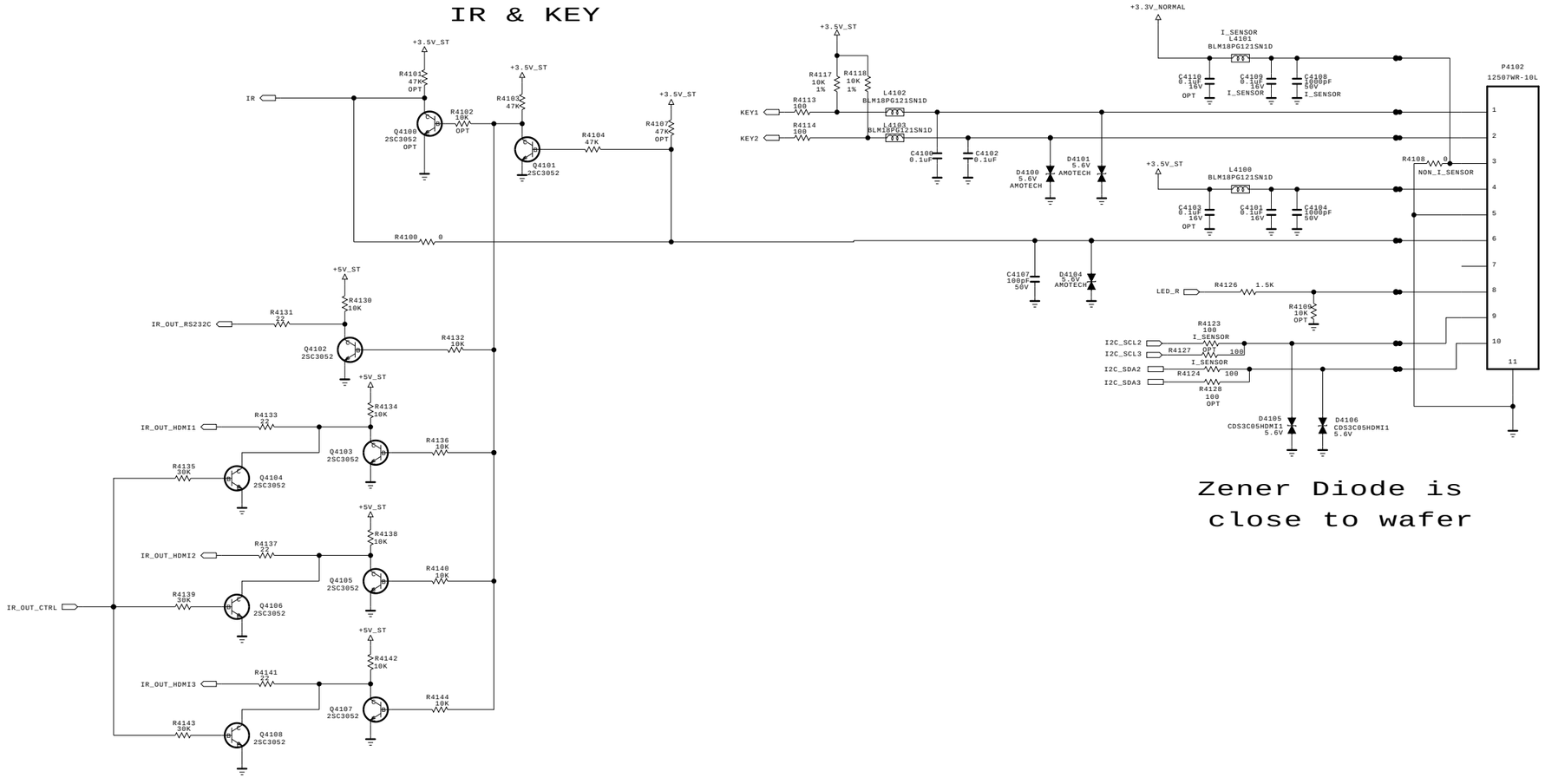

Zener Diode is close to wafer

THE ⚠ SYMBOL MARK OF THIS SCHEMETIC DIAGRAM INCORPORATES SPECIAL FEATURES IMPORTANT FOR PROTECTION FROM X-RADIATION. FILRE AND ELECTRICAL SHOCK HAZARDS, WHEN SERVICING IF IS ESSENTIAL THAT ONLY MANUFATURES SPECFIED PARTS BE USED FOR THE CRITICAL COMPONENTS IN THE ⚠ SYMBOL MARK OF THE SCHEMETIC.

SECRET
LGElectronics

LG ELECTRONICS

MODEL	xxLT760H-UA	DATE	2011.09.26
BLOCK	IR / KEY	SHEET	41

Copyright © 2012 LG Electronics. Inc. All rights reserved.
Only for training and service purposes

LGE Internal Use Only

USB To SERIAL I/F

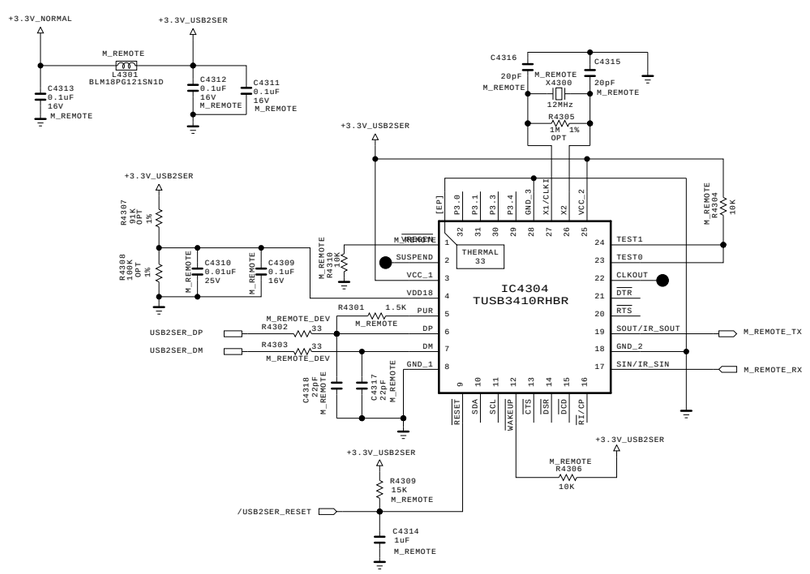

USB_WIFI

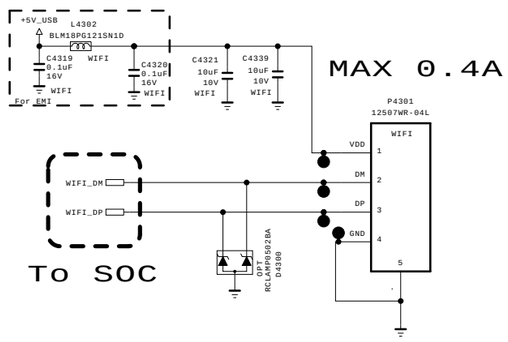

+5V_USB FOR USB

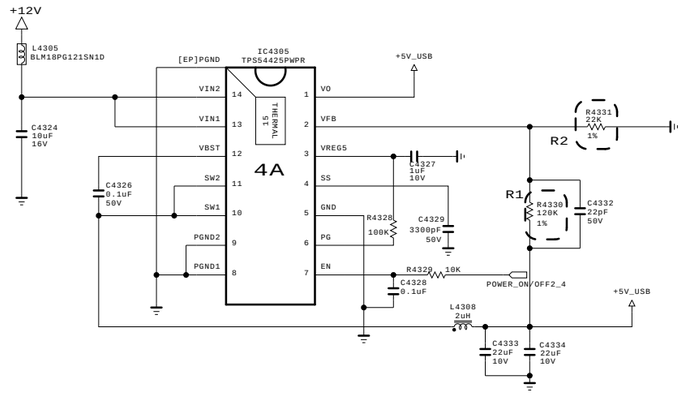

USB2

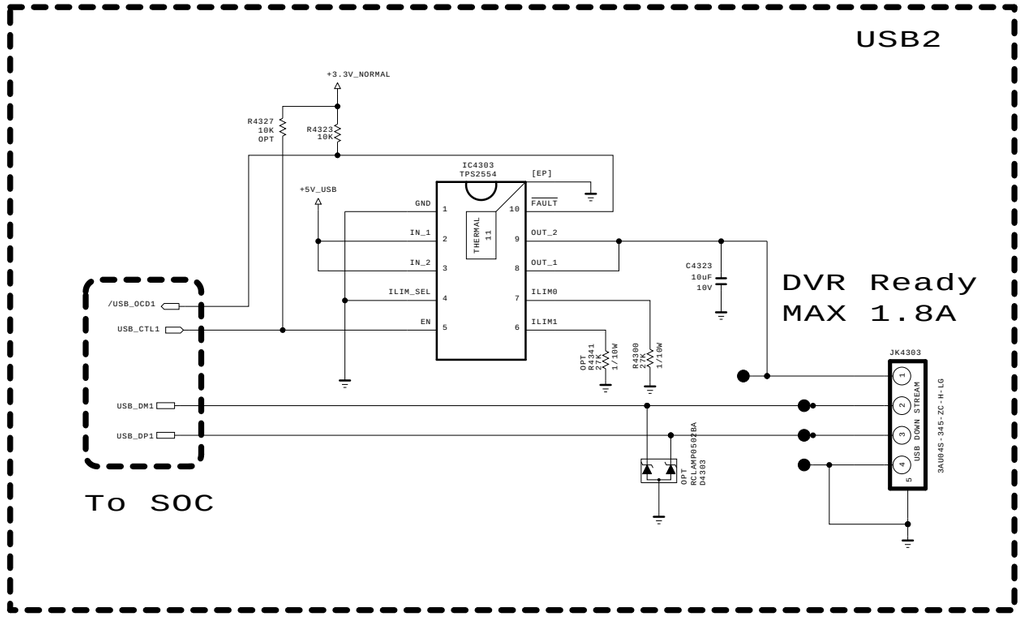

USB1

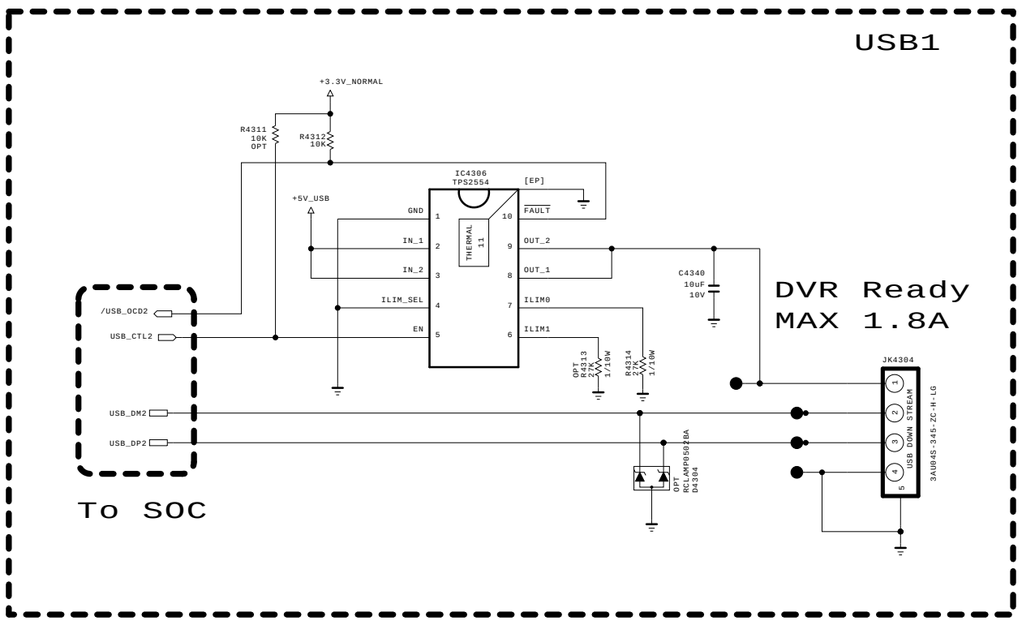

THE ⚠ SYMBOL MARK OF THIS SCHEMETIC DIAGRAM INCORPORATES SPECIAL FEATURES IMPORTANT FOR PROTECTION FROM X-RADIATION. FILRE AND ELECTRICAL SHOCK HAZARDS, WHEN SERVICING IF IS ESSENTIAL THAT ONLY MANUFATURES SPECFIED PARTS BE USED FOR THE CRITICAL COMPONENTS IN THE ⚠ SYMBOL MARK OF THE SCHEMETIC.

SECRET
LGElectronics

LG ELECTRONICS

MODEL	xxLT760H-UA	DATE	2011.09.29
BLOCK	USB3_HUB_WiFi	SHEET	43

Copyright © 2012 LG Electronics. Inc. All rights reserved.
Only for training and service purposes

LGE Internal Use Only

Full Scart

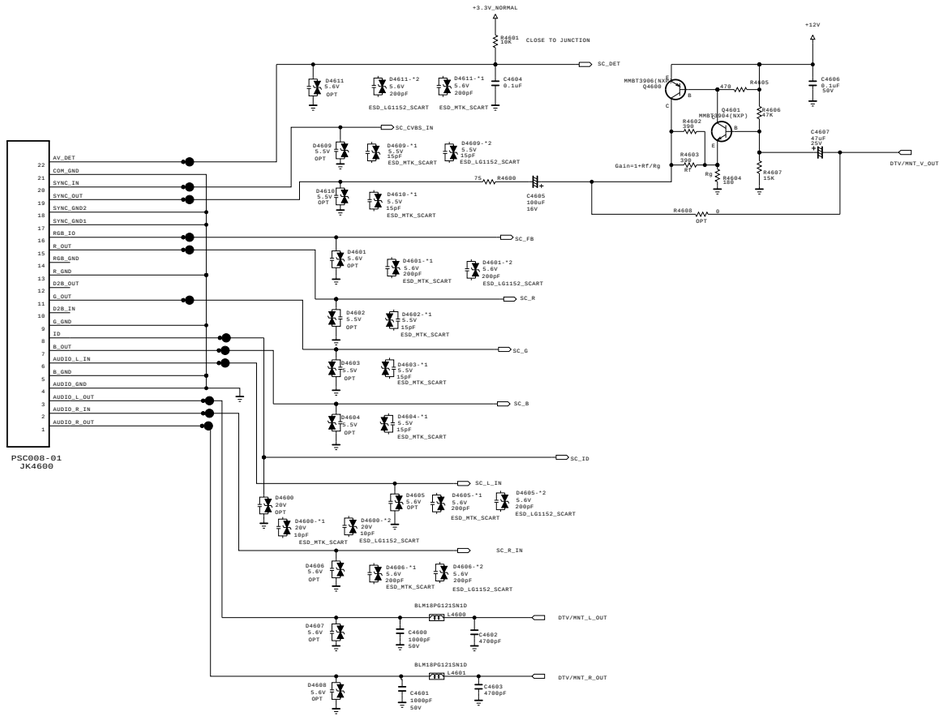

[SCART AUDIO MUTE]

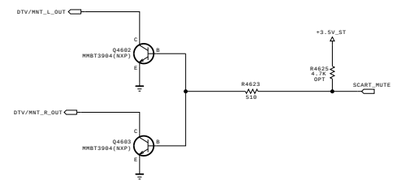

THE ⚠ SYMBOL MARK OF THIS SCHEMETIC DIAGRAM INCORPORATES SPECIAL FEATURES IMPORTANT FOR PROTECTION FROM X-RADIATION. FILRE AND ELECTRICAL SHOCK HAZARDS, WHEN SERVICING IF IS ESSENTIAL THAT ONLY MANUFATURES SPECFIED PARTS BE USED FOR THE CRITICAL COMPONENTS IN THE ⚠ SYMBOL MARK OF THE SCHEMETIC.

SECRET
LGElectronics

LG ELECTRONICS

MODEL	SCART GENDER	DATE	2011.10.26
BLOCK		SHEET	46

Copyright © 2012 LG Electronics. Inc. All rights reserved.
Only for training and service purposes

LGE Internal Use Only

ZigBee_Radio Pulse M_REMOTE OPTION

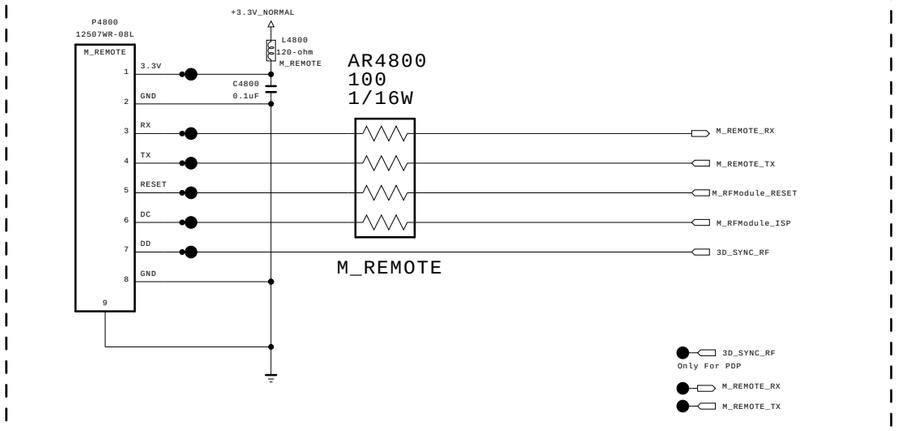

ALL M_REMOTE OPTION

THE ⚠ SYMBOL MARK OF THIS SCHEMETIC DIAGRAM INCORPORATES SPECIAL FEATURES IMPORTANT FOR PROTECTION FROM X-RADIATION. FILRE AND ELECTRICAL SHOCK HAZARDS, WHEN SERVICING IF IS ESSENTIAL THAT ONLY MANUFATURES SPECFIED PARTS BE USED FOR THE CRITICAL COMPONENTS IN THE ⚠ SYMBOL MARK OF THE SCHEMETIC.

SECRET
LGElectronics

LG ELECTRONICS

MODEL	xxLT760H-ZA	DATE	2011.06.04
BLOCK	MOTION REMOTE	SHEET	48

Copyright © 2012 LG Electronics. Inc. All rights reserved.
Only for training and service purposes

LGE Internal Use Only

DUAL COMPONENT	
Q1801	1ST : 0TRIY80001A 2ND : 0TR387500AA

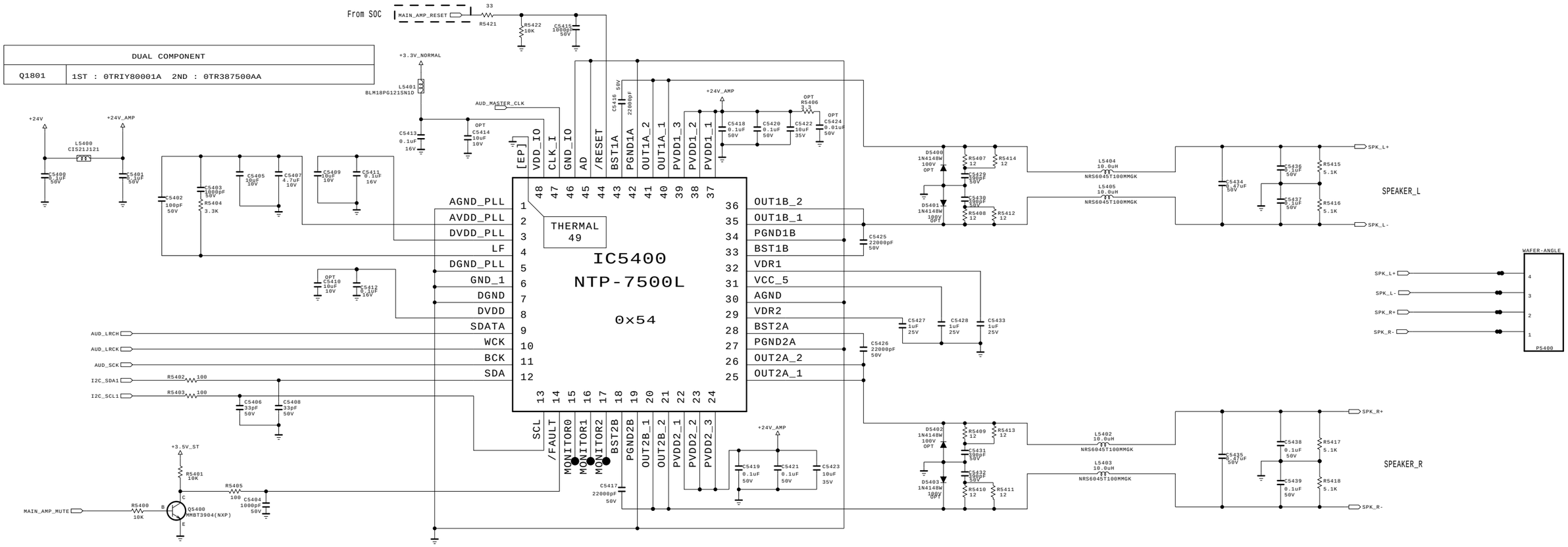

THE ⚠ SYMBOL MARK OF THIS SCHEMETIC DIAGRAM INCORPORATES SPECIAL FEATURES IMPORTANT FOR PROTECTION FROM X-RADIATION. FILRE AND ELECTRICAL SHOCK HAZARDS, WHEN SERVICING IF IS ESSENTIAL THAT ONLY MANUFATURES SPECFIED PARTS BE USED FOR THE CRITICAL COMPONENTS IN THE ⚠ SYMBOL MARK OF THE SCHEMETIC.

SECRET
LGElectronics

LG ELECTRONICS

MODEL	xxLT760H-UA	DATE	2011.04.30
BLOCK	AMP_NEO	SHEET	54

Copyright © 2012 LG Electronics. Inc. All rights reserved.
Only for training and service purposes

LGE Internal Use Only

CI POWER ENABLE CONTROL

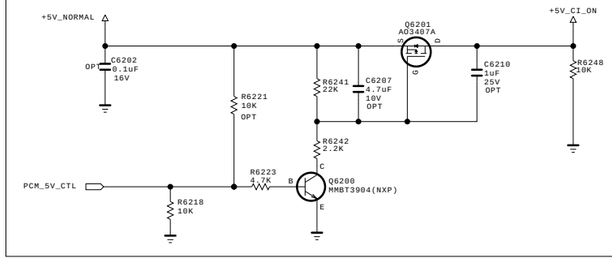

Option FOR MTK

C6210-*1
1uF
25V
CI_MTK

Option FOR LG1152

THE ⚠ SYMBOL MARK OF THIS SCHEMETIC DIAGRAM INCORPORATES SPECIAL FEATURES IMPORTANT FOR PROTECTION FROM X-RADIATION. FILRE AND ELECTRICAL SHOCK HAZARDS, WHEN SERVICING IF IS ESSENTIAL THAT ONLY MANUFATURES SPECFIED PARTS BE USED FOR THE CRITICAL COMPONENTS IN THE ⚠ SYMBOL MARK OF THE SCHEMETIC.

SECRET
LGElectronics

LG ELECTRONICS

MODEL	CI SLOT	DATE	2011.10.31
BLOCK		SHEET	62

Copyright © 2012 LG Electronics. Inc. All rights reserved.
Only for training and service purposes

LGE Internal Use Only

H/NIM for Commercial (EU)

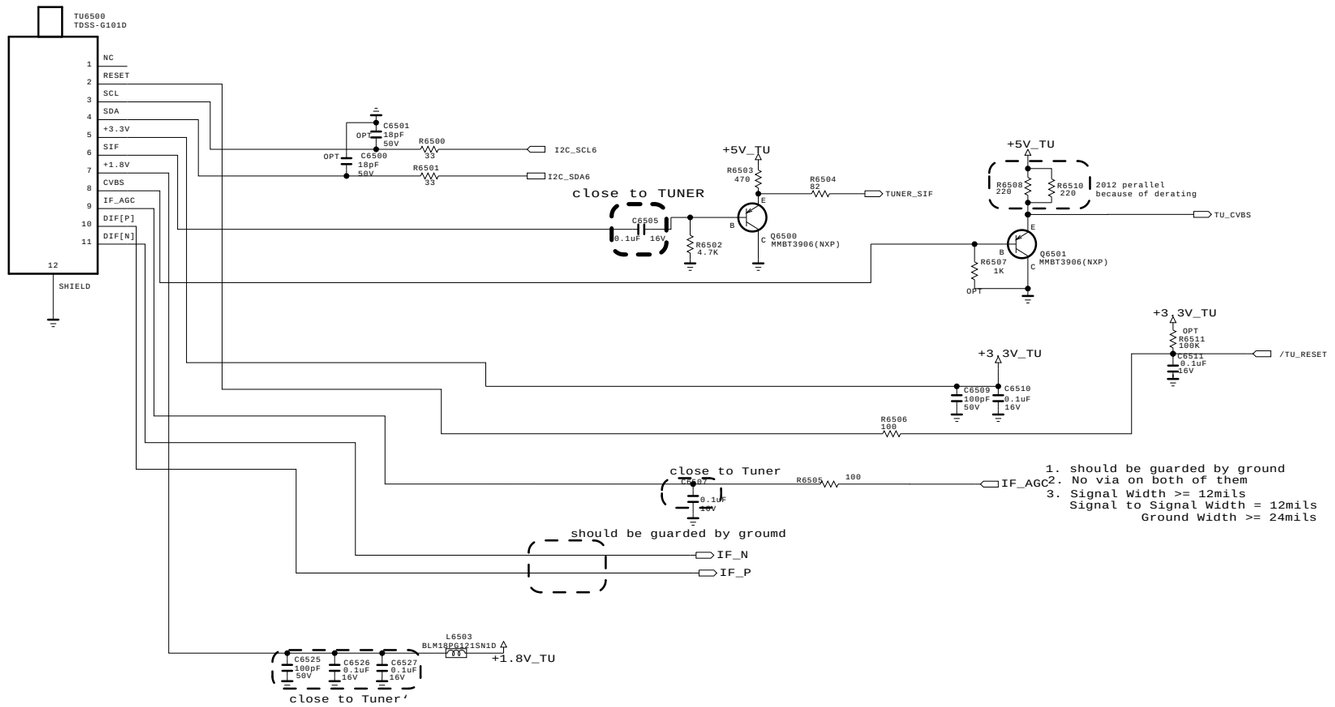

1. should be guarded by ground
2. No via on both of them
3. Signal Width >= 12mils
   Signal to Signal Width = 12mils
   Ground Width >= 24mils

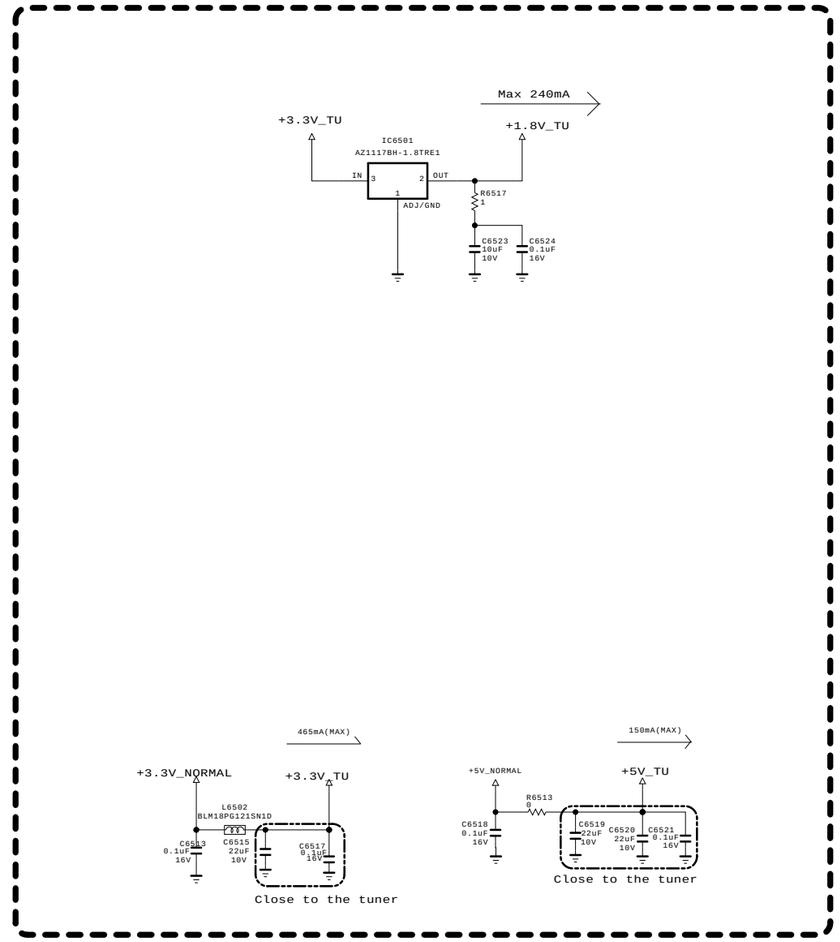

THE ⚠ SYMBOL MARK OF THIS SCHEMETIC DIAGRAM INCORPORATES SPECIAL FEATURES IMPORTANT FOR PROTECTION FROM X-RADIATION. FILRE AND ELECTRICAL SHOCK HAZARDS, WHEN SERVICING IF IS ESSENTIAL THAT ONLY MANUFATURES SPECFIED PARTS BE USED FOR THE CRITICAL COMPONENTS IN THE ⚠ SYMBOL MARK OF THE SCHEMETIC.

SECRET
LGElectronics

LG ELECTRONICS

MODEL	xxLT760H-UA	DATE	2011.08.11
BLOCK	TUNER	SHEET	65

Copyright © 2012 LG Electronics. Inc. All rights reserved.
Only for training and service purposes

LGE Internal Use Only

LVDS

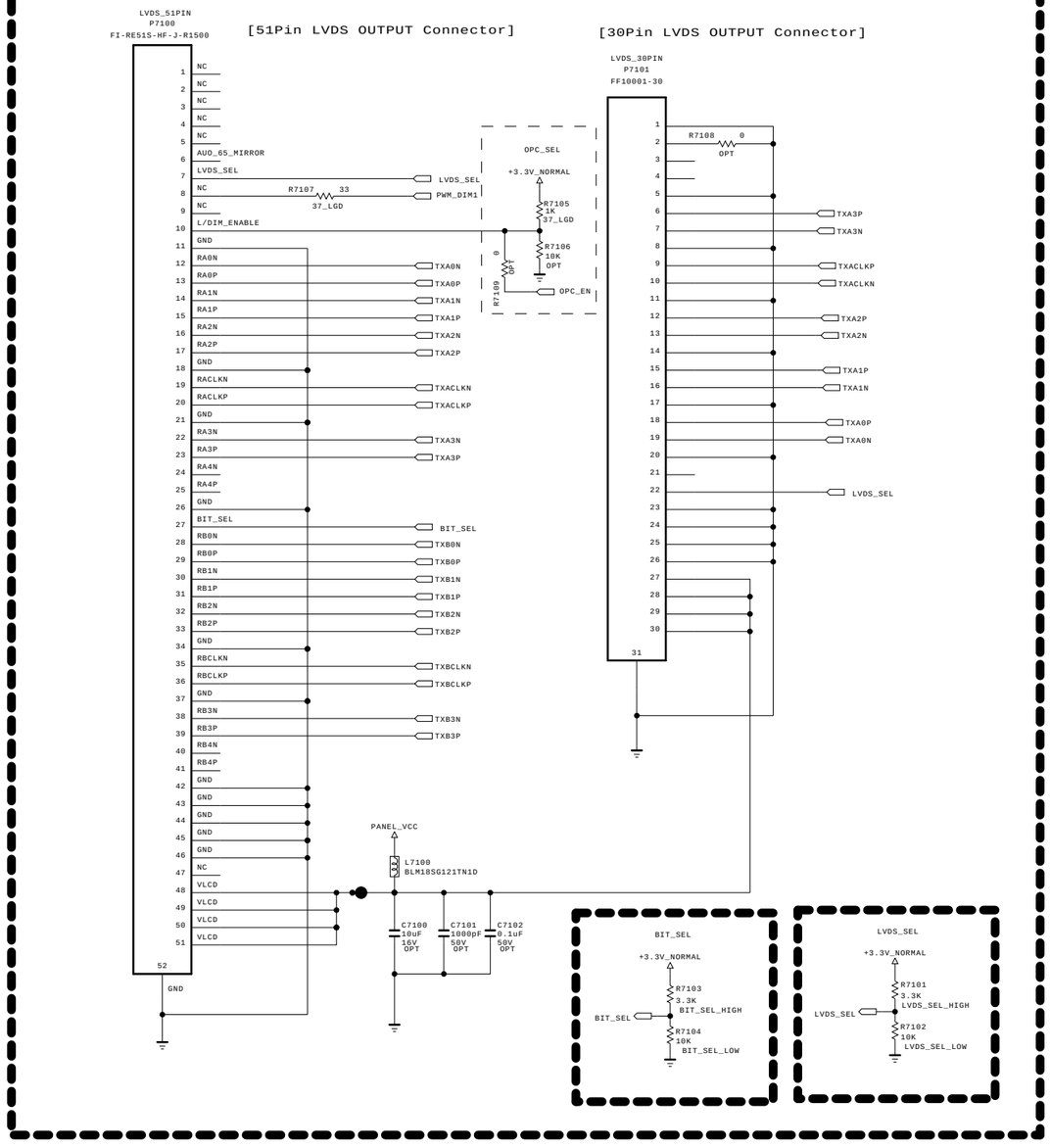

THE ⚠ SYMBOL MARK OF THIS SCHEMETIC DIAGRAM INCORPORATES SPECIAL FEATURES IMPORTANT FOR PROTECTION FROM X-RADIATION. FILRE AND ELECTRICAL SHOCK HAZARDS, WHEN SERVICING IF IS ESSENTIAL THAT ONLY MANUFATURES SPECFIED PARTS BE USED FOR THE CRITICAL COMPONENTS IN THE ⚠ SYMBOL MARK OF THE SCHEMETIC.

SECRET
LGElectronics

LG ELECTRONICS

MODEL	xxLT760H-UA	DATE	2011.08.11
BLOCK	LVDS_HIGH_MID	SHEET	71

Copyright © 2012 LG Electronics. Inc. All rights reserved.
Only for training and service purposes

LGE Internal Use Only

LOCAL DIMMING

[To LED DRIVER]

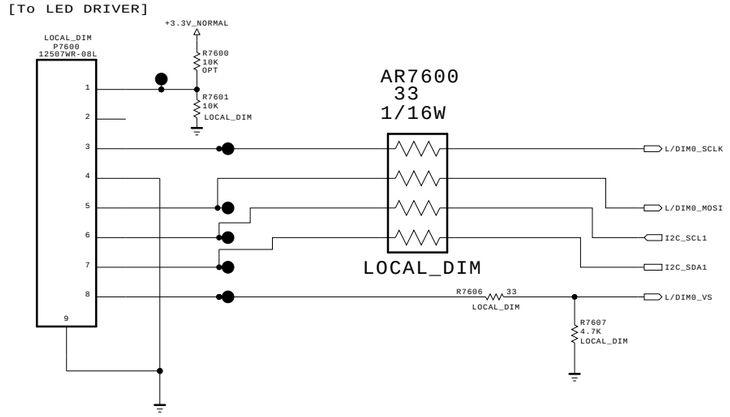

THE ⚠ SYMBOL MARK OF THIS SCHEMETIC DIAGRAM INCORPORATES SPECIAL FEATURES IMPORTANT FOR PROTECTION FROM X-RADIATION. FILRE AND ELECTRICAL SHOCK HAZARDS, WHEN SERVICING IF IS ESSENTIAL THAT ONLY MANUFATURES SPECFIED PARTS BE USED FOR THE CRITICAL COMPONENTS IN THE ⚠ SYMBOL MARK OF THE SCHEMETIC.

SECRET
LGElectronics

LG ELECTRONICS

MODEL	xxLT760H-UA	DATE	2011.04.30
BLOCK	LOCAL DIMMING	SHEET	76

Copyright © 2012 LG Electronics. Inc. All rights reserved.
Only for training and service purposes

LGE Internal Use Only

eMMC I/F

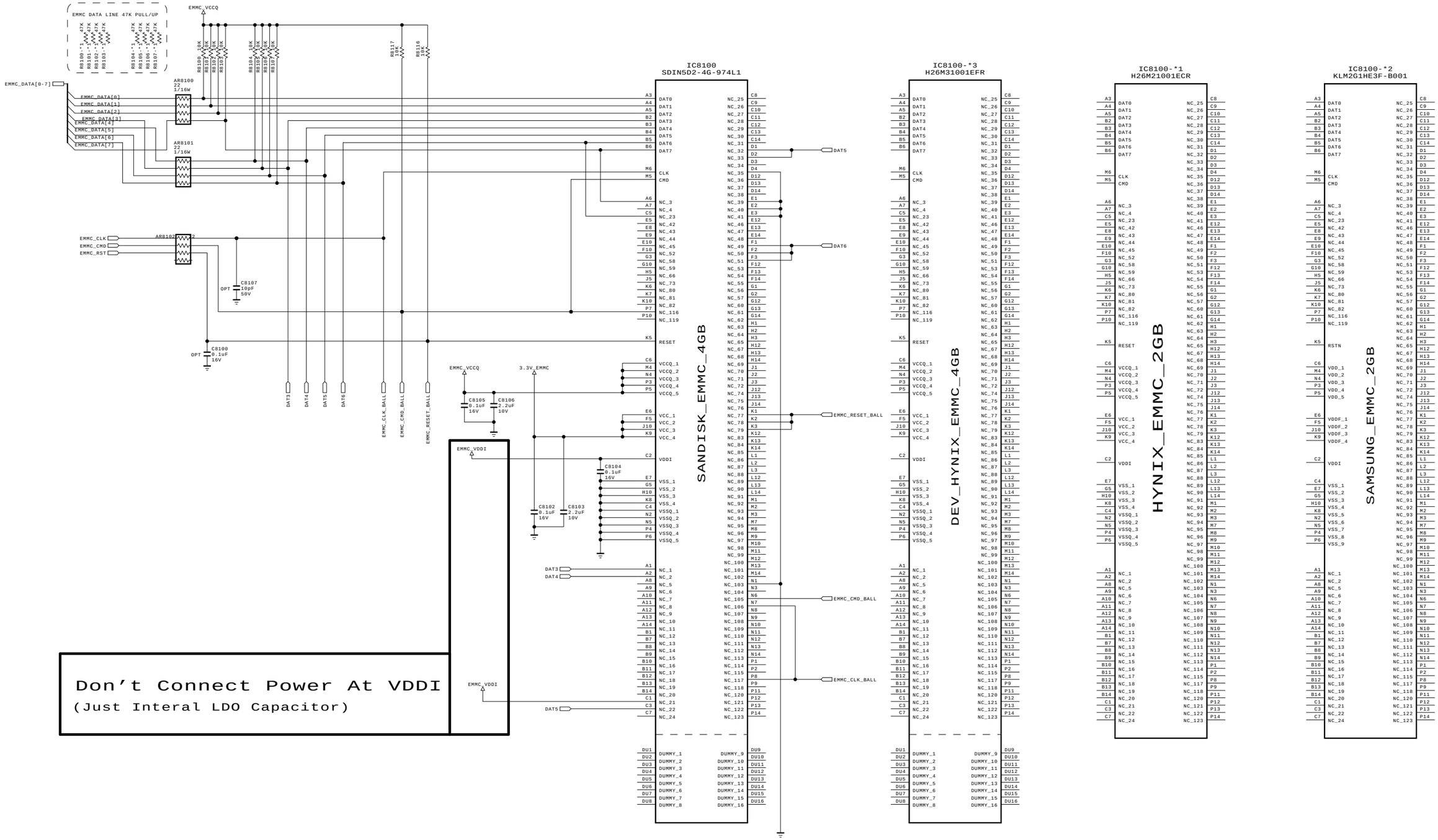

Don't Connect Power At VDDI
(Just Interal LDO Capacitor)

THE ⚠ SYMBOL MARK OF THIS SCHEMETIC DIAGRAM INCORPORATES SPECIAL FEATURES IMPORTANT FOR PROTECTION FROM X-RADIATION. FILRE AND ELECTRICAL SHOCK HAZARDS, WHEN SERVICING IF IS ESSENTIAL THAT ONLY MANUFATURES SPECFIED PARTS BE USED FOR THE CRITICAL COMPONENTS IN THE ⚠ SYMBOL MARK OF THE SCHEMETIC.

SECRET
LGElectronics

LG ELECTRONICS

MODEL	xxLT760H-UA	DATE	11.09.29
BLOCK	eMMC	SHEET	81

Copyright © 2012 LG Electronics. Inc. All rights reserved.
Only for training and service purposes

LGE Internal Use Only

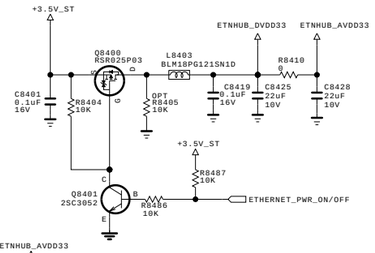

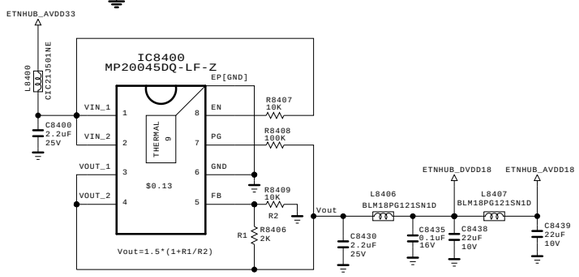

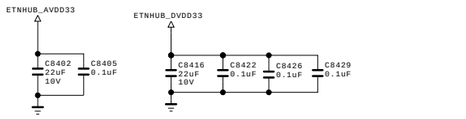

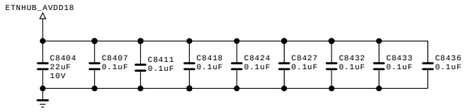

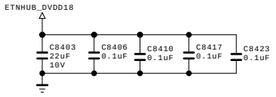

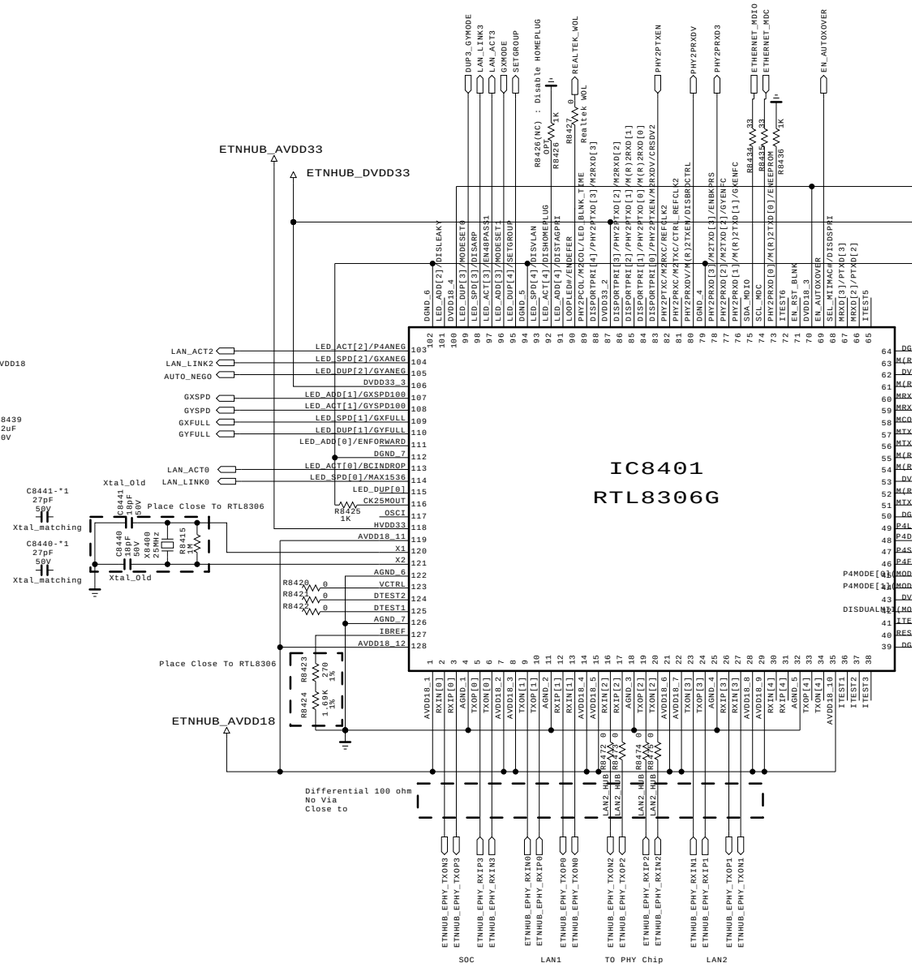

STRAPPING PIN CONFIG

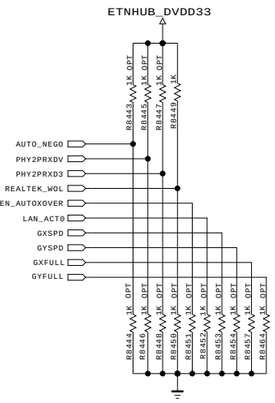

PHY2PRXDV : Broadcast strom control enable/disable
PHY2PRXD3 : Backpressure enable/disable
ENDEFER(NOT USED) : Defer enable/disable
EN_AUTOXOVER : Auto cross over enable/disable

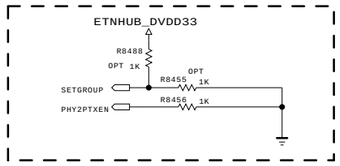

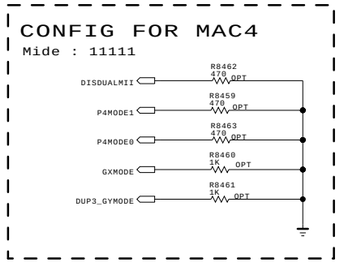

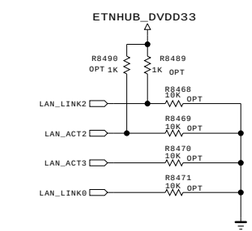

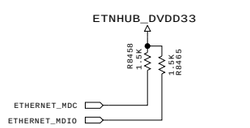

MTK TO RTL matching

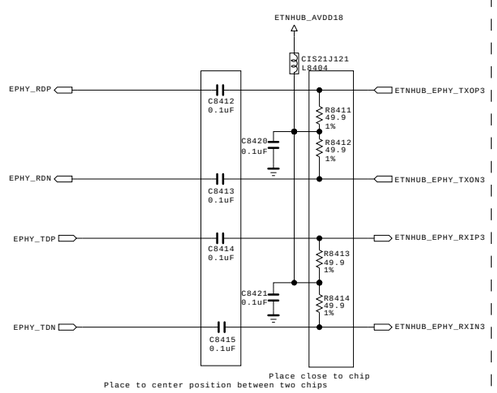

PHY TO RTL matching

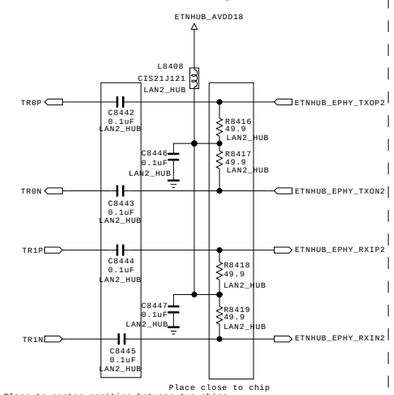

FOR DEBUG

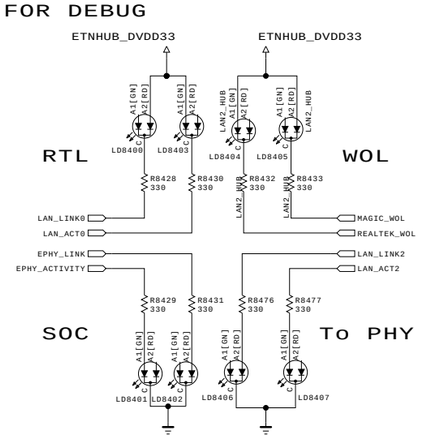

THE ⚠ SYMBOL MARK OF THIS SCHEMETIC DIAGRAM INCORPORATES SPECIAL FEATURES IMPORTANT FOR PROTECTION FROM X-RADIATION. FILRE AND ELECTRICAL SHOCK HAZARDS, WHEN SERVICING IF IS ESSENTIAL THAT ONLY MANUFATURES SPECFIED PARTS BE USED FOR THE CRITICAL COMPONENTS IN THE ⚠ SYMBOL MARK OF THE SCHEMETIC.

SECRET
LGElectronics

LG ELECTRONICS

MODEL	xxLT760H-UA	DATE	2011.02.09
BLOCK	Ethernet Hub	SHEET	84

Copyright © 2012 LG Electronics. Inc. All rights reserved.
Only for training and service purposes

LGE Internal Use Only

EXT_SPK OP AMP

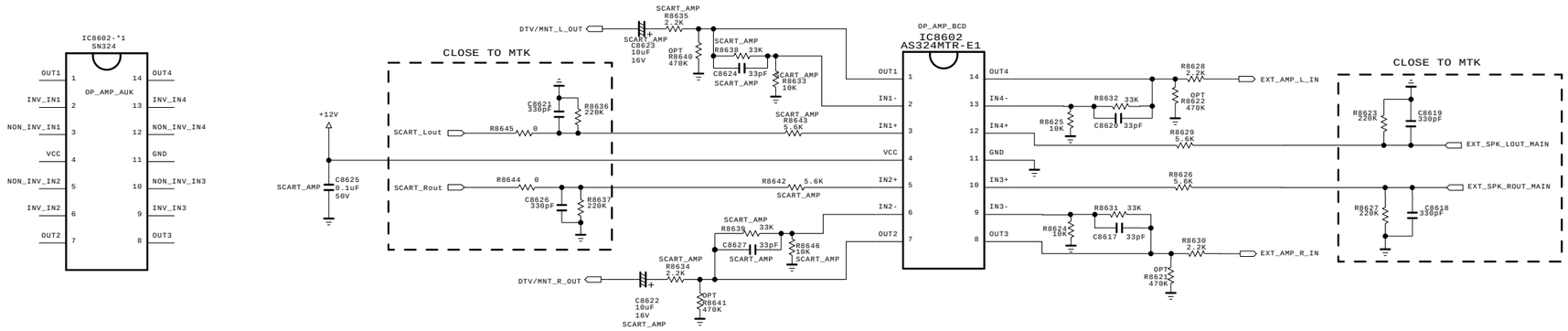

EXT_SPK AMP

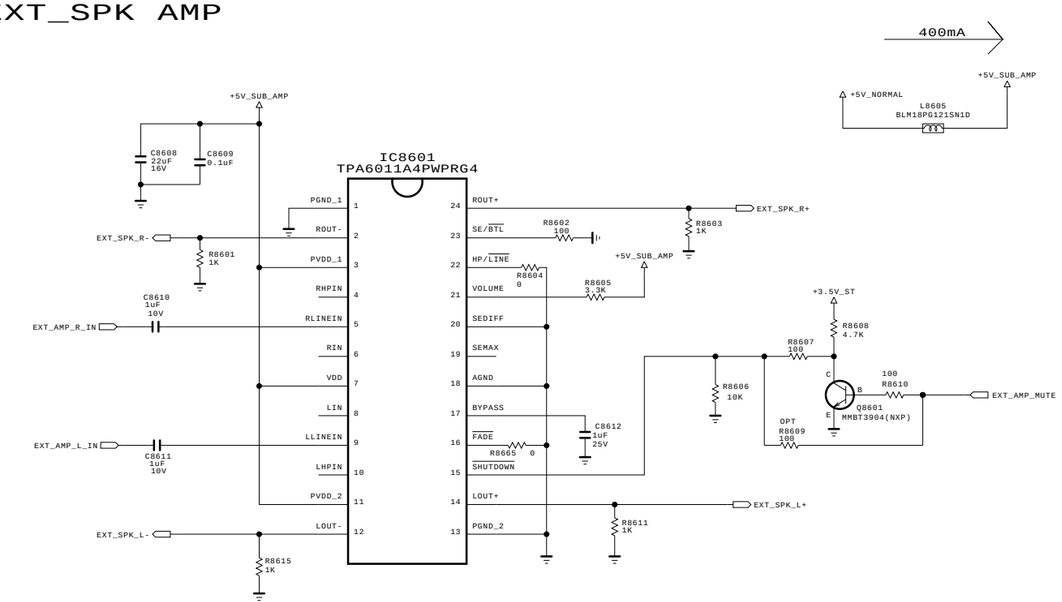

EXT_SPK OUT

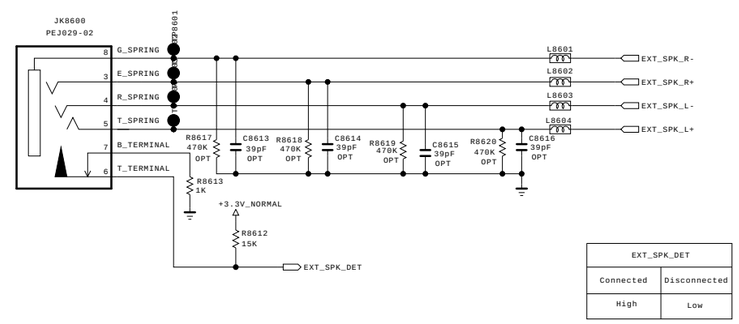

EXT_SPK_DET	
Connected	Disconnected
High	Low

THE ⚠ SYMBOL MARK OF THIS SCHEMETIC DIAGRAM INCORPORATES SPECIAL FEATURES IMPORTANT FOR PROTECTION FROM X-RADIATION. FILRE AND ELECTRICAL SHOCK HAZARDS, WHEN SERVICING IF IS ESSENTIAL THAT ONLY MANUFATURES SPECFIED PARTS BE USED FOR THE CRITICAL COMPONENTS IN THE ⚠ SYMBOL MARK OF THE SCHEMETIC.

SECRET
LGElectronics

LG ELECTRONICS

MODEL	xxLT760H-UA	DATE	2011.02.09
BLOCK	EXT_SPK	SHEET	86

Copyright © 2012 LG Electronics. Inc. All rights reserved.
Only for training and service purposes

LGE Internal Use Only

REAL TIME CLOCK(RTC)

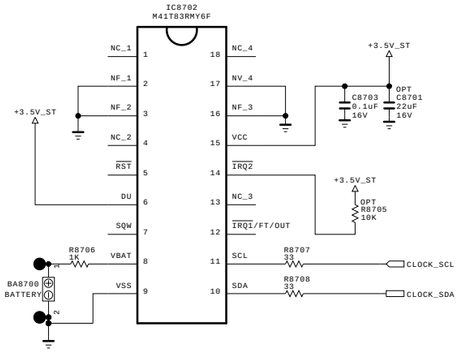

MICOM MODEL OPTION

MODEL OPTION

PIN NAME	PIN NO.	HIGH	LOW
MODEL_OPT_0	80	OPT	OPT
MODEL_OPT_1	79	OPT	OPT
MODEL_OPT_2	78	NON_CLOCK	CLOCK

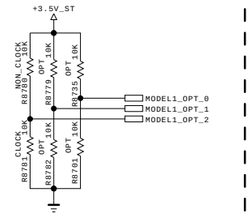

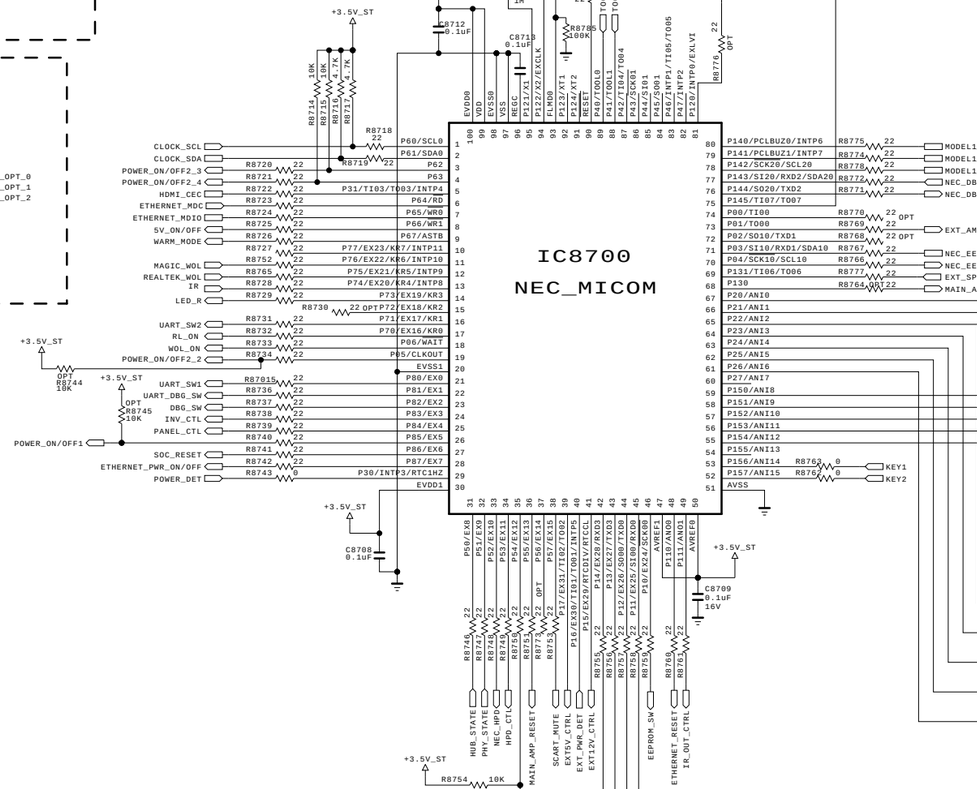

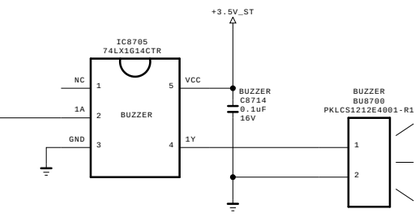

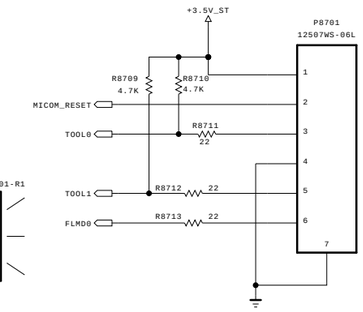

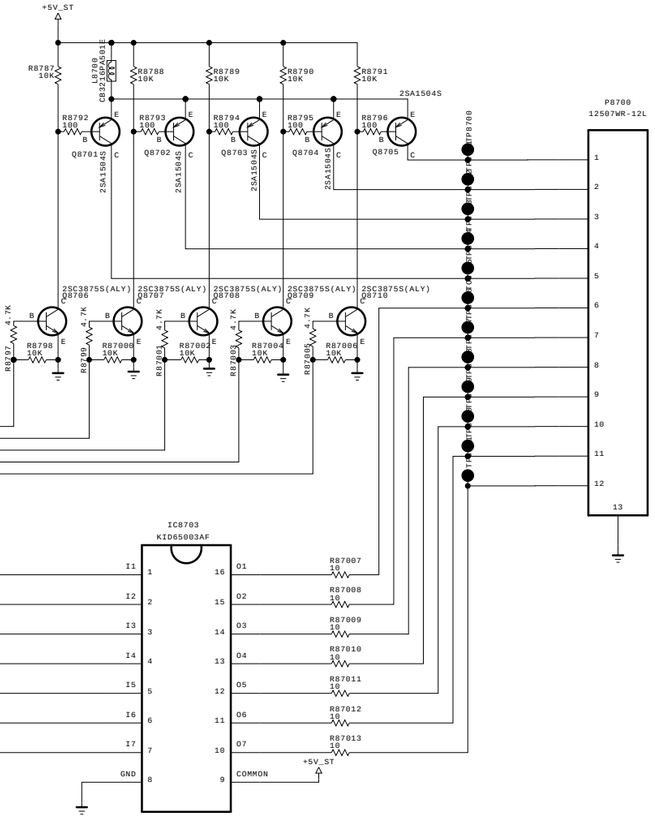

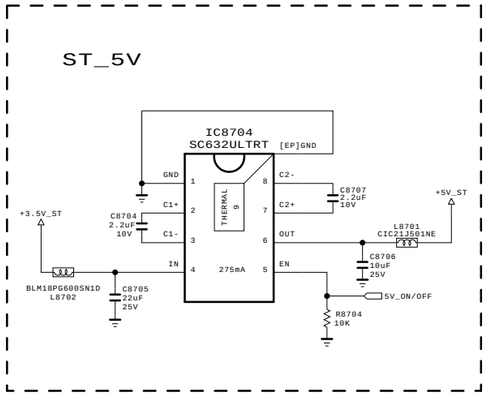

THE ⚠ SYMBOL MARK OF THIS SCHEMETIC DIAGRAM INCORPORATES SPECIAL FEATURES IMPORTANT FOR PROTECTION FROM X-RADIATION. FILRE AND ELECTRICAL SHOCK HAZARDS, WHEN SERVICING IF IS ESSENTIAL THAT ONLY MANUFATURES SPECFIED PARTS BE USED FOR THE CRITICAL COMPONENTS IN THE ⚠ SYMBOL MARK OF THE SCHEMETIC.

SECRET
LGElectronics

LG ELECTRONICS

MODEL	xxLT760H-UA	DATE	2011.02.09
BLOCK	PTC	SHEET	87

Copyright © 2012 LG Electronics. Inc. All rights reserved.
Only for training and service purposes

LGE Internal Use Only

SMD GASKET

SMD GASKET 4.5T

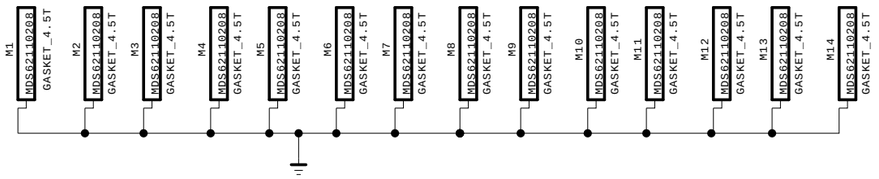

SMD GASKET 5.0T

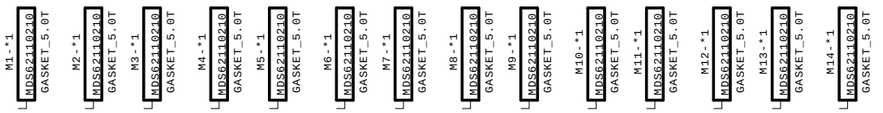

SMD GASKET 5.5T

SMD GASKET 6.5T

SMD GASKET 7.5T

SMD GASKET 8.5T

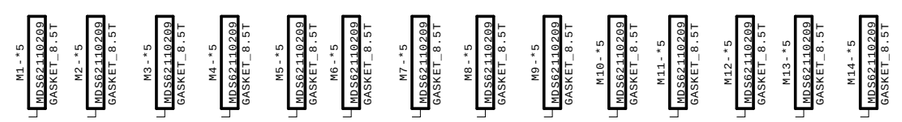

SMD GASKET 9.5T

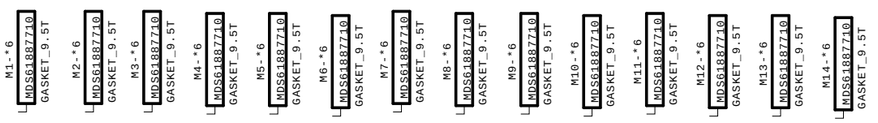

THE ⚠ SYMBOL MARK OF THIS SCHEMETIC DIAGRAM INCORPORATES SPECIAL FEATURES IMPORTANT FOR PROTECTION FROM X-RADIATION. FILRE AND ELECTRICAL SHOCK HAZARDS, WHEN SERVICING IF IS ESSENTIAL THAT ONLY MANUFATURES SPECFIED PARTS BE USED FOR THE CRITICAL COMPONENTS IN THE ⚠ SYMBOL MARK OF THE SCHEMETIC.

SECRET

LGElectronics

LG ELECTRONICS

MODEL	xxLT760H-UA	DATE	2011.02.09
BLOCK	SMD GASKET	SHEET	88

Copyright © 2012 LG Electronics. Inc. All rights reserved.
Only for training and service purposes

LGE Internal Use Only

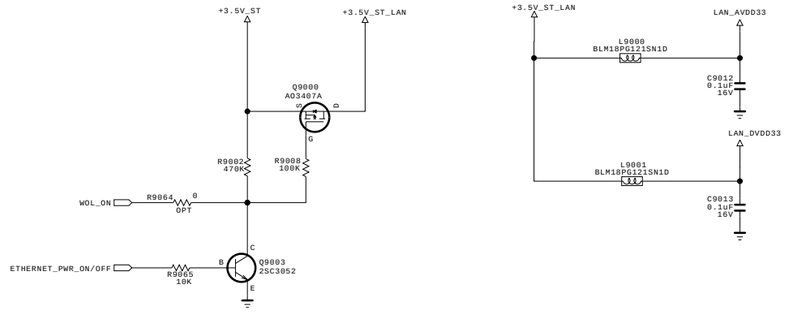

PHY chip for WOL

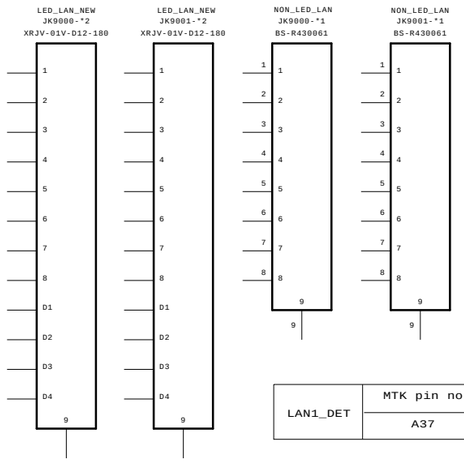

LED_LAN_OLD	EMI FAIL
LED_LAN_NEW	EMI BETTER
NON_LED_LAN	EMI PASS

LAN1_DET	MTK pin no	Status
	A37	Input

	GXFULL	LAN1_DET
Connected	Low	High
Not Connected	High	Low

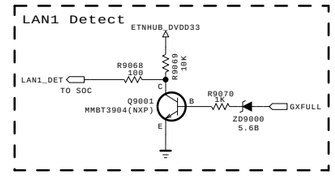

LAN 1
EXT AUX RJ45

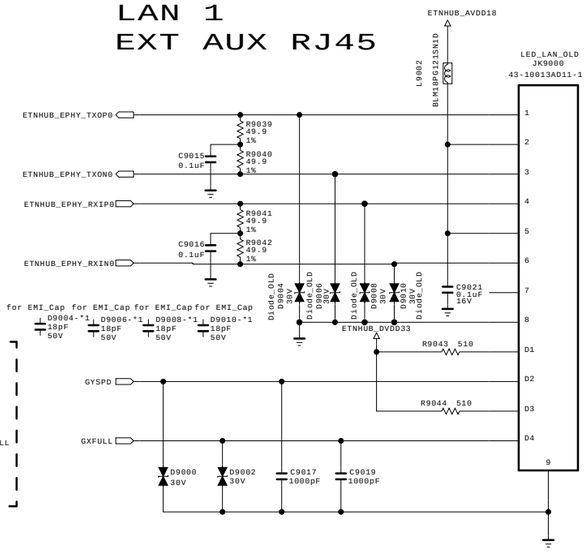

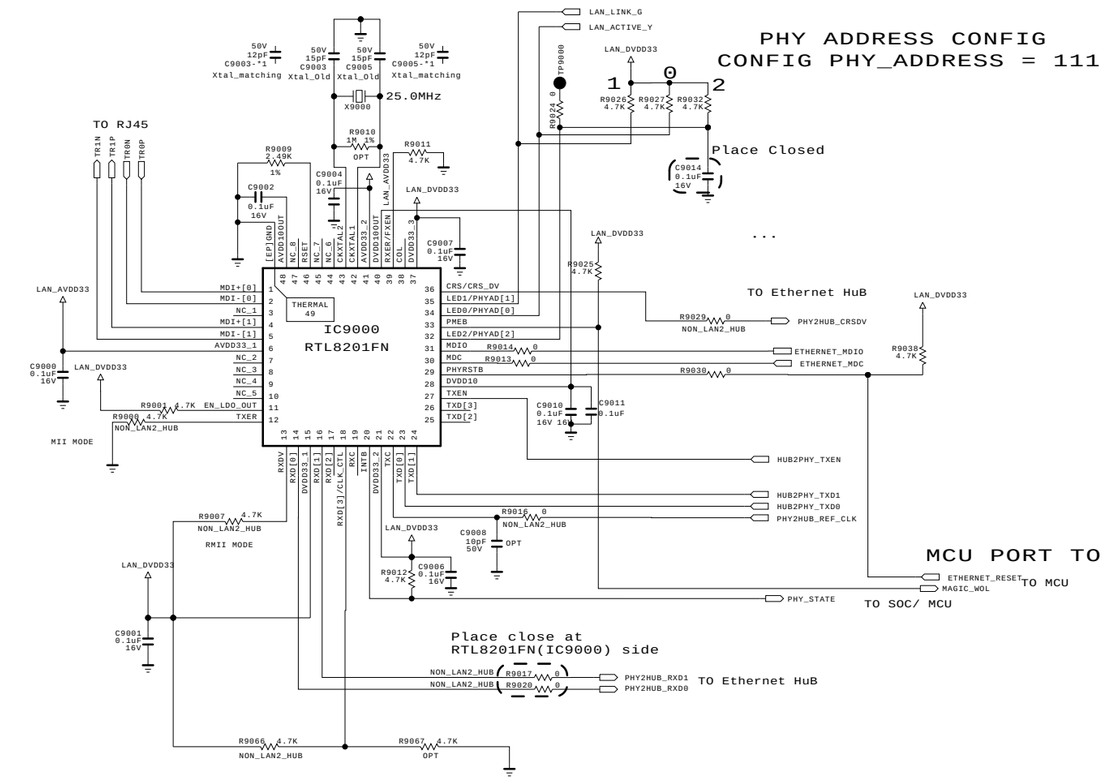

LAN2_DET	MTK pin no	Status
	C35	Input

	LAN_LINK3	LAN2_DET
Connected	Low	High
Not Connected	High	Low

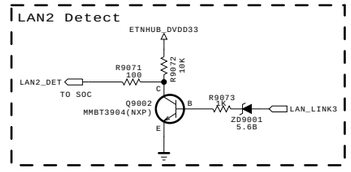

LAN 2
RJ 45

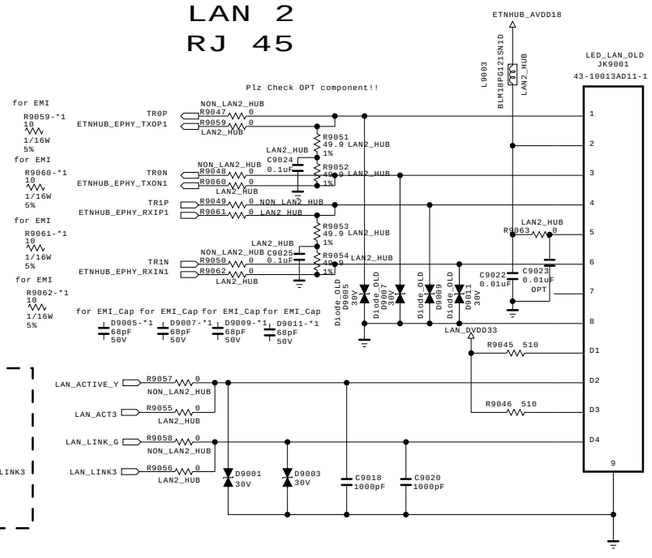

Ethernet Block

THE ⚠ SYMBOL MARK OF THIS SCHEMETIC DIAGRAM INCORPORATES SPECIAL FEATURES IMPORTANT FOR PROTECTION FROM X-RADIATION. FILRE AND ELECTRICAL SHOCK HAZARDS, WHEN SERVICING IF IS ESSENTIAL THAT ONLY MANUFATURES SPECFIED PARTS BE USED FOR THE CRITICAL COMPONENTS IN THE ⚠ SYMBOL MARK OF THE SCHEMETIC.

SECRET
LGElectronics

LG ELECTRONICS

MODEL	xxLT760H-UA	DATE	2011.08.26
BLOCK	Ethernet PHY	SHEET	90

Copyright © 2012 LG Electronics. Inc. All rights reserved.
Only for training and service purposes

LGE Internal Use Only

Vout=(1+R1/R2)*0.765=5.03V

EXTERNAL_POWER OUT 5V/12V

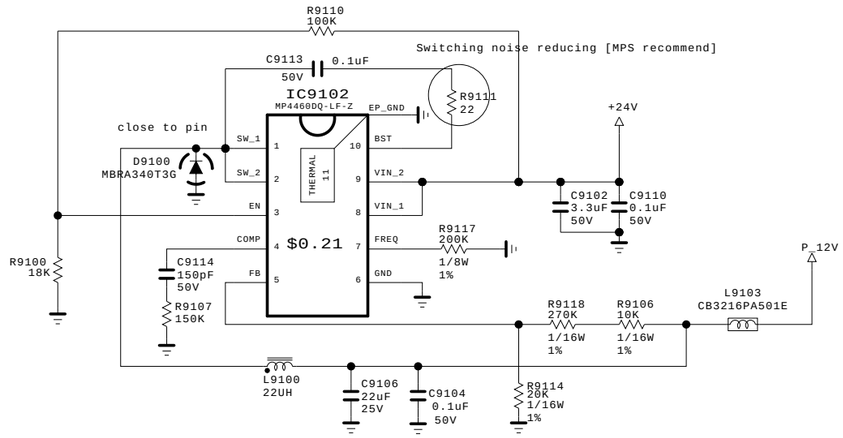

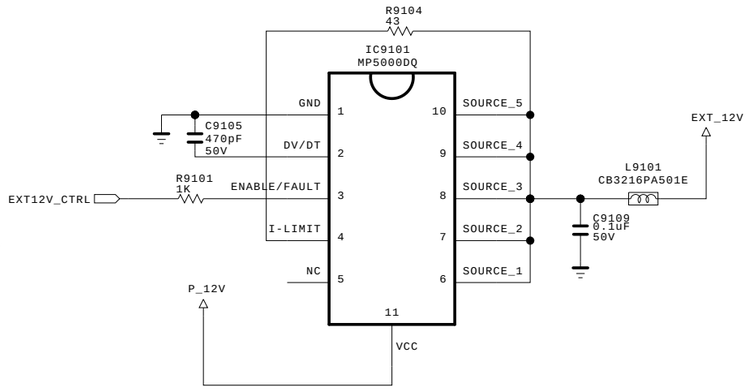

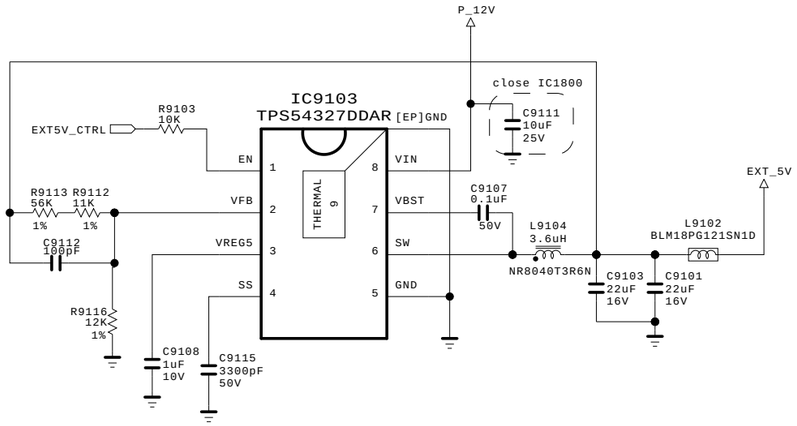

EXTERNAL_POWER DETECTION

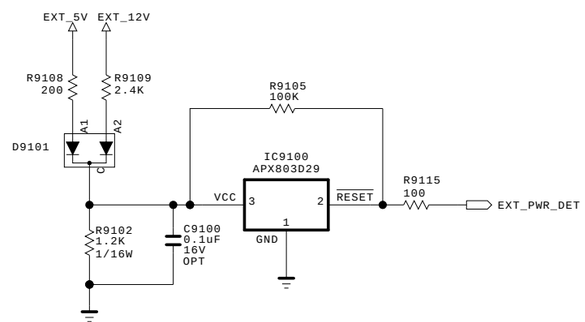

THE ⚠ SYMBOL MARK OF THIS SCHEMETIC DIAGRAM INCORPORATES SPECIAL FEATURES IMPORTANT FOR PROTECTION FROM X-RADIATION. FILRE AND ELECTRICAL SHOCK HAZARDS, WHEN SERVICING IF IS ESSENTIAL THAT ONLY MANUFATURES SPECFIED PARTS BE USED FOR THE CRITICAL COMPONENTS IN THE ⚠ SYMBOL MARK OF THE SCHEMETIC.

SECRET

LGElectronics

LG ELECTRONICS

MODEL	xxLT760H-UA	DATE	2011.02.09
BLOCK	5V/12V Power Out	SHEET	91

Copyright © 2012 LG Electronics. Inc. All rights reserved.
Only for training and service purposes

LGE Internal Use Only

Pro:Idiom (XMARK)

Power

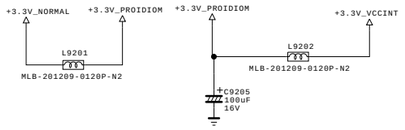

27MHz(200ppm)

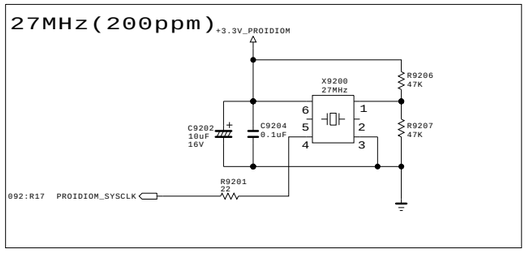

XMARK_1.8V

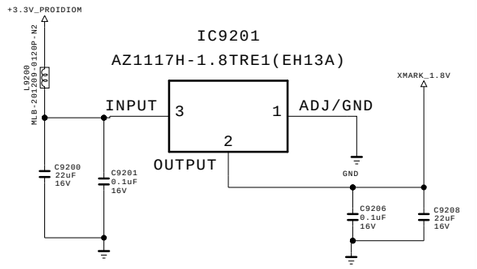

RESET

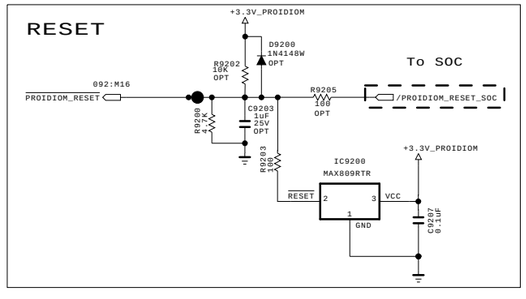

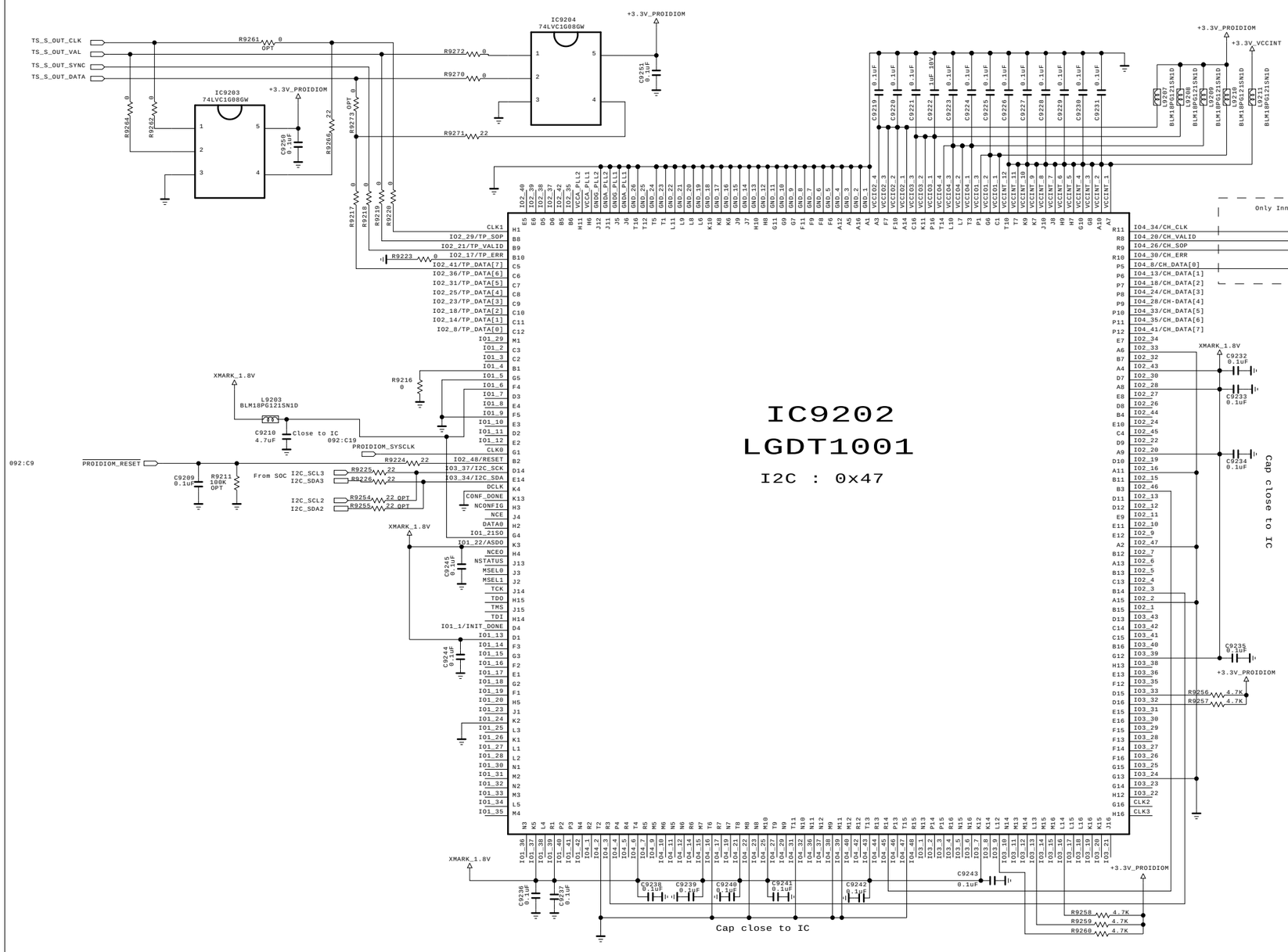

IC9202
LGDT1001
I2C : 0x47

LG1001	Use XMARK
LGDT1129	Not use XMARK

THE ⚠ SYMBOL MARK OF THIS SCHEMETIC DIAGRAM INCORPORATES SPECIAL FEATURES IMPORTANT FOR PROTECTION FROM X-RADIATION. FILRE AND ELECTRICAL SHOCK HAZARDS, WHEN SERVICING IF IS ESSENTIAL THAT ONLY MANUFATURES SPECFIED PARTS BE USED FOR THE CRITICAL COMPONENTS IN THE ⚠ SYMBOL MARK OF THE SCHEMETIC.

SECRET
LGElectronics

LG ELECTRONICS

MODEL	xxLT760H-UA	DATE	2011.02.09
BLOCK	Pro:Idiom	SHEET	92

Copyright © 2012 LG Electronics. Inc. All rights reserved.
Only for training and service purposes

LGE Internal Use Only

LG
Life's Good